| Date | Version | Page | Change notice |
|---|---|---|---|
| 2020.06.xx | Pre-Released | | |
| 2020.07.xx | V01 | | |
| 2020.08.14 | V02 | 13_BB_1 | Disconnect Dummy pins A1,A34,AP1,AP34 to GND |
| | | 29_POWER_EXT | Change C2923 cap from 6.3V to 10V |
| | | 20_POWER_MT6365_Buck | [PDN] Change Caps of DVDD_GPU - C2039/C2038 to NC |
| | | 25_POWER_MT6315_VMD | [PDN] Change Caps of DVDD_MODEM - C2502/C2534/C2523/C2522 to NC |
| 2020.08.26 | V03 | File name | Modify the file name |

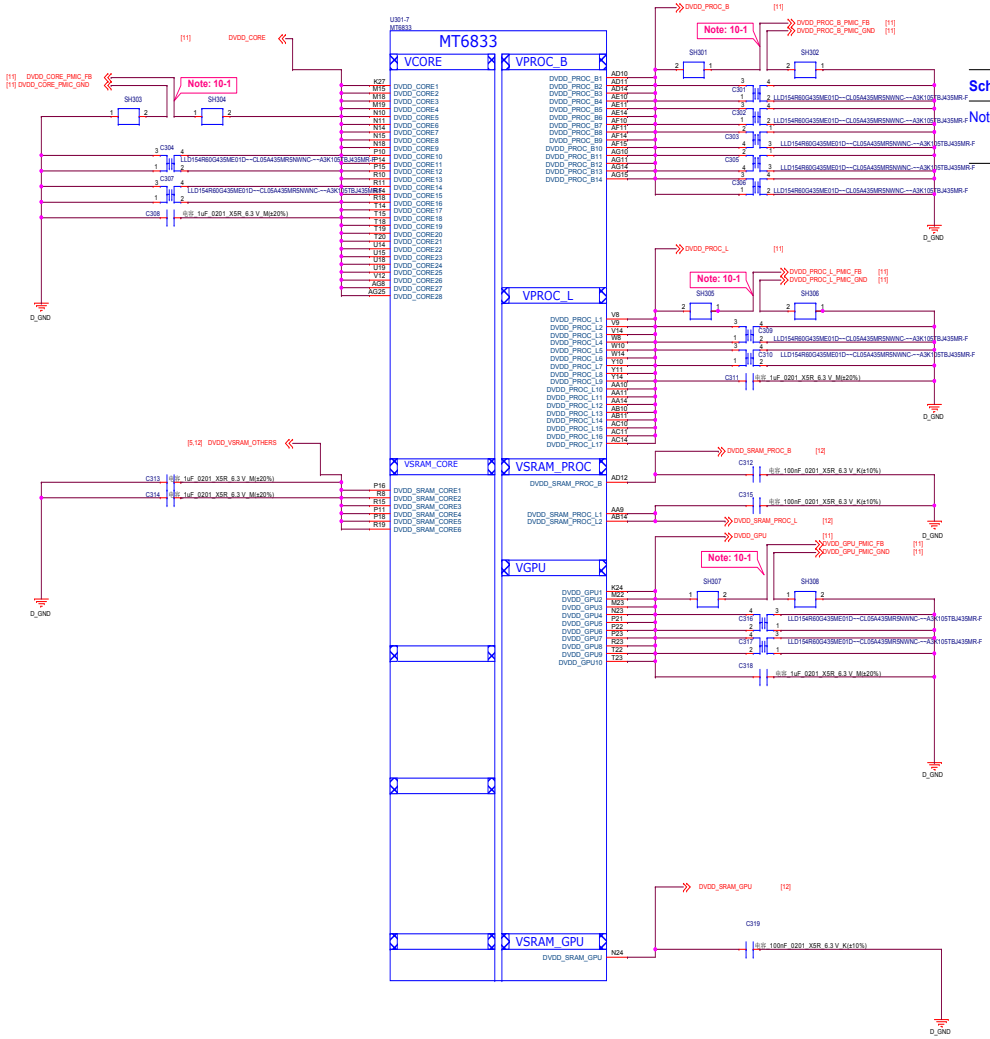


**Schematic design notice of "10_BB_POWER_PDN" page.**

Note 10-1: Differential pair of PMIC remote sense must be close to BB's ball.

Remote sense trace with GND shielding to PMIC (Differential)

| | |
|---|---|
| 华勤通讯 Huaqin Telecom Technology Com.,Ltd | |
| Title | 03.BB_POWER_PDN1 |
| Size D | Project <Doc> |
| Rev V1 | |
| Date: Tuesday, January 12, 2021 | Sheet 3 of 48 |

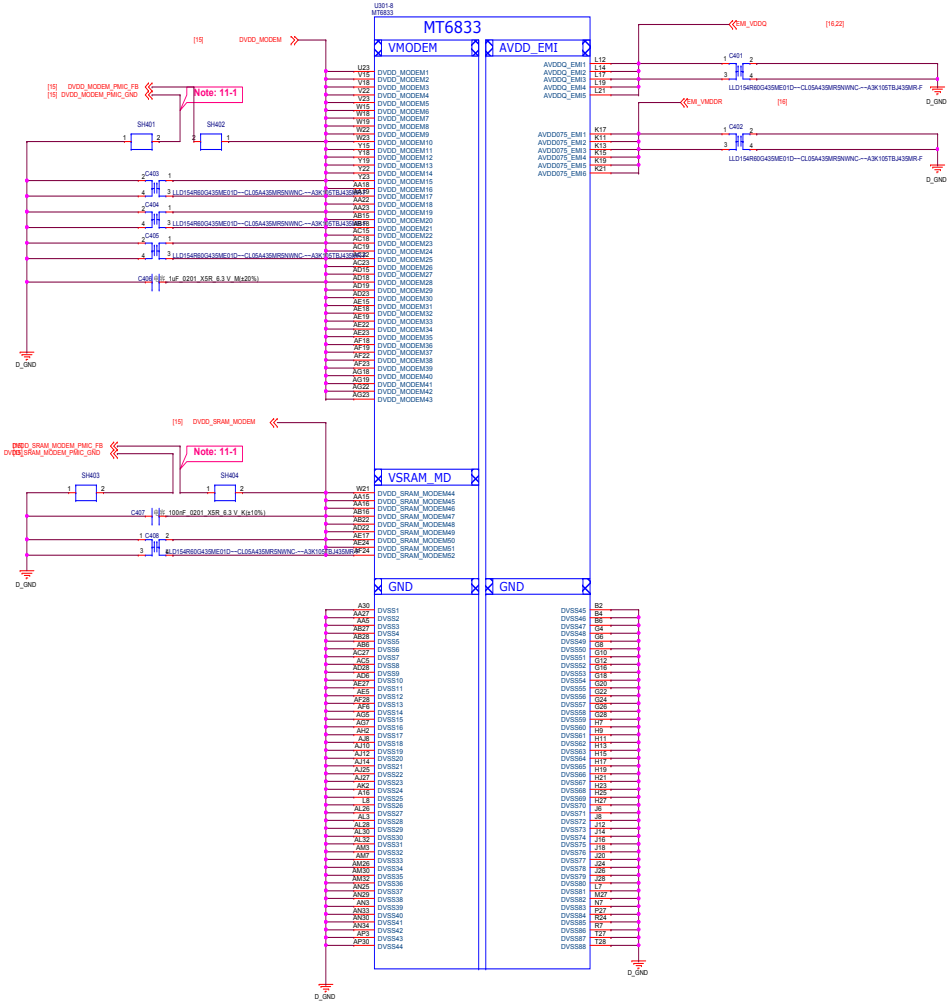


**Schematic design notice of "11_BB_POWER_PDN" page.**

Note 11-1: Differential pair of PMIC remote sense must be close to BB's ball.
Remote sense trace with GND shielding to PMIC (Differential)

| | | |
|---|---|---|
| 华勤通讯 Huaqin Telecom Technology Com.,Ltd | | |
| Title 04.BB_POWER_PDN2 | | |
| Size D | Project <Doc> | Rev V1 |
| Date: Tuesday, January 12, 2021 | Sheet 4 of 48 | |

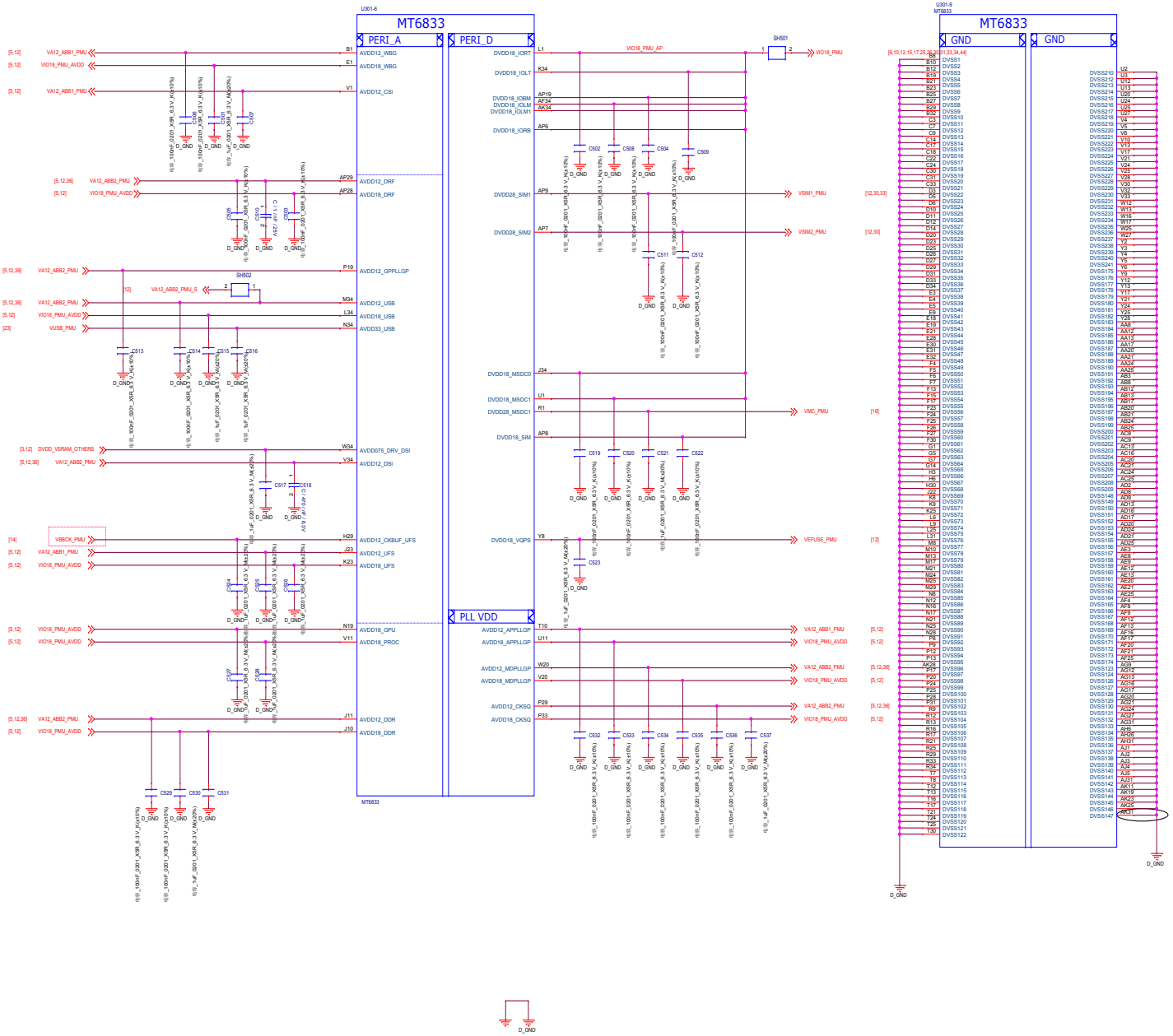


华勤通讯 Huaqin Telecom Technology Com.,Ltd

| | | |
|---|---|---|
| Title | 05.BB_POWER_IO | |
| Size D | Project <Doc> | Rev V1 |
| Date: Tuesday, January 12, 2021 | Sheet 5 of 48 | |

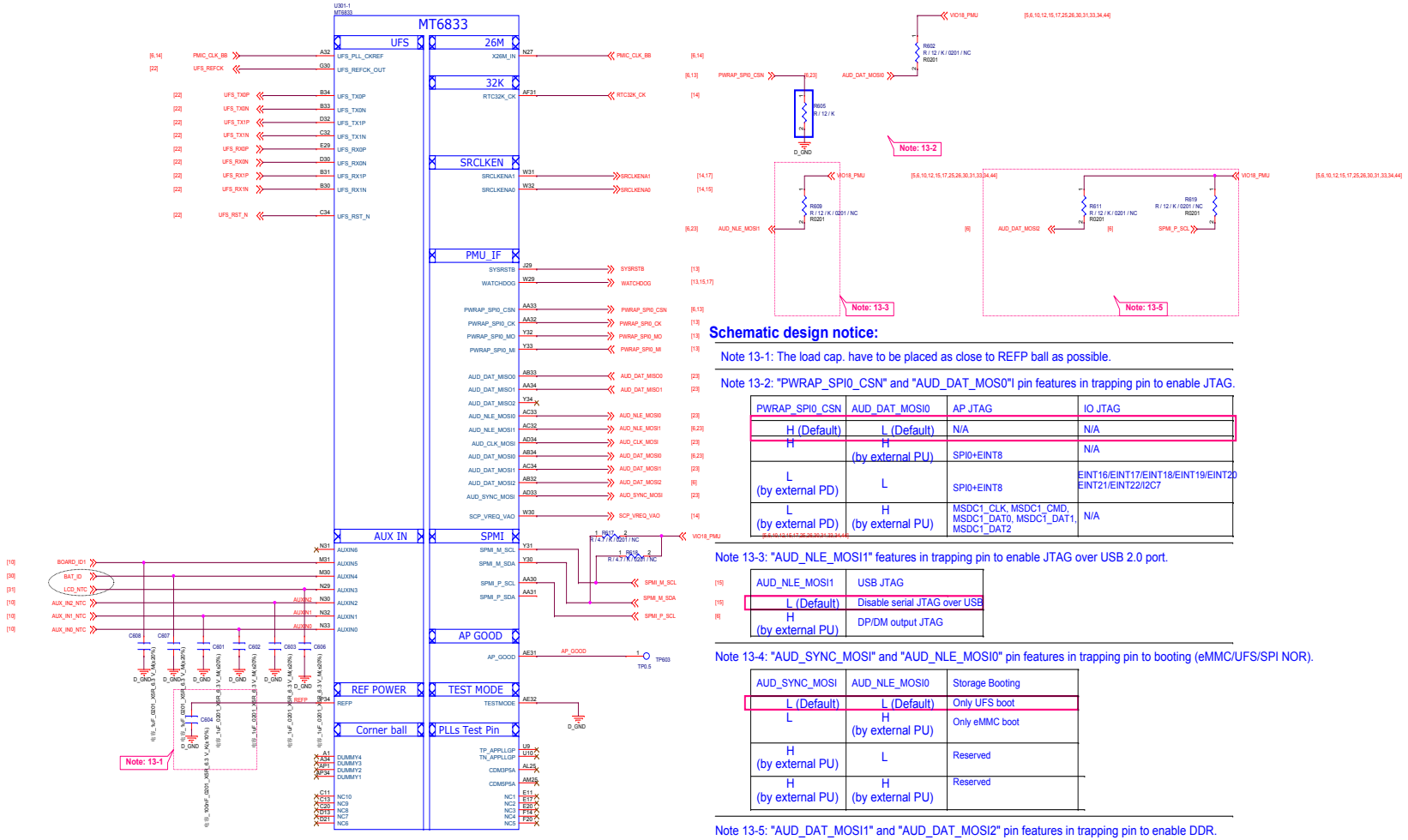


## Schematic design notice:

Note 13-1: The load cap. have to be placed as close to REFP ball as possible.

Note 13-2: "PWRAP_SPI0_CSN" and "AUD_DAT_MOS0"I pin features in trapping pin to enable JTAG.

| PWRAP_SPI0_CSN | AUD_DAT_MOSI0 | AP JTAG | IO JTAG |
|---|---|---|---|
| H (Default) | L (Default) | N/A | N/A |
| H | H (by external PU) | SPI0+EINT8 | N/A |
| L (by external PD) | L | SPI0+EINT8 | EINT16/EINT17/EINT18/EINT19/EINT20 EINT21/EINT22/I2C7 |
| L (by external PD) | H (by external PU) | MSDC1_CLK, MSDC1_CMD, MSDC1_DAT0, MSDC1_DAT1, MSDC1_DAT2 | N/A |

Note 13-3: "AUD_NLE_MOSI1" features in trapping pin to enable JTAG over USB 2.0 port.

| AUD_NLE_MOSI1 | USB JTAG |
|---|---|
| L (Default) | Disable serial JTAG over USB |
| H (by external PU) | DP/DM output JTAG |

Note 13-4: "AUD_SYNC_MOSI" and "AUD_NLE_MOSI0" pin features in trapping pin to booting (eMMC/UFS/SPI NOR).

| AUD_SYNC_MOSI | AUD_NLE_MOSI0 | Storage Booting |
|---|---|---|
| L (Default) | L (Default) | Only UFS boot |
| L | H (by external PU) | Only eMMC boot |
| H (by external PU) | L | Reserved |
| H (by external PU) | H (by external PU) | Reserved |

Note 13-5: "AUD_DAT_MOSI1" and "AUD_DAT_MOSI2" pin features in trapping pin to enable DDR.

| AUD_DAT_MOSI1 | AUD_DAT_MOSI2 | SPMI_P_SCL | DDR |
|---|---|---|---|
| L (Default) | L (Default) | L (Default) | LP4x-MCP-4266Mbps |
| L | H (by external PU) | L (Default) | LP4x-Discrete-4266Mbps |
| H (by external PU) | L | L (Default) | Reserved |
| H (by external PU) | H (by external PU) | L (Default) | Reserved |

Note : SPMI_P_SCL for DDR 4266Mbps/3733Mbps Co-load, 'L' = 4266Mbps, 'H(by external PU)' = 3733Mbps

Note 13-6: "AUD_DAT_MISO1" is trapping pin to select VEMC Voltage.

| AUD_DAT_MISO1 | VEMC Voltage |
|---|---|
| L (Default) | VEMC=3.0V for VCC of UFS2.* device |
| H (by external PU) | VEMC=2.5V for VCC of UFS3.0 device |

华勤通讯 Huaqin Telecom Technology Com.,Ltd

| Title | 06.BB_1 | |
|---|---|---|
| Size D | Project <Doc> | Rev V1 |
| Date: Tuesday, January 12, 2021 | Sheet 6 of 48 | |

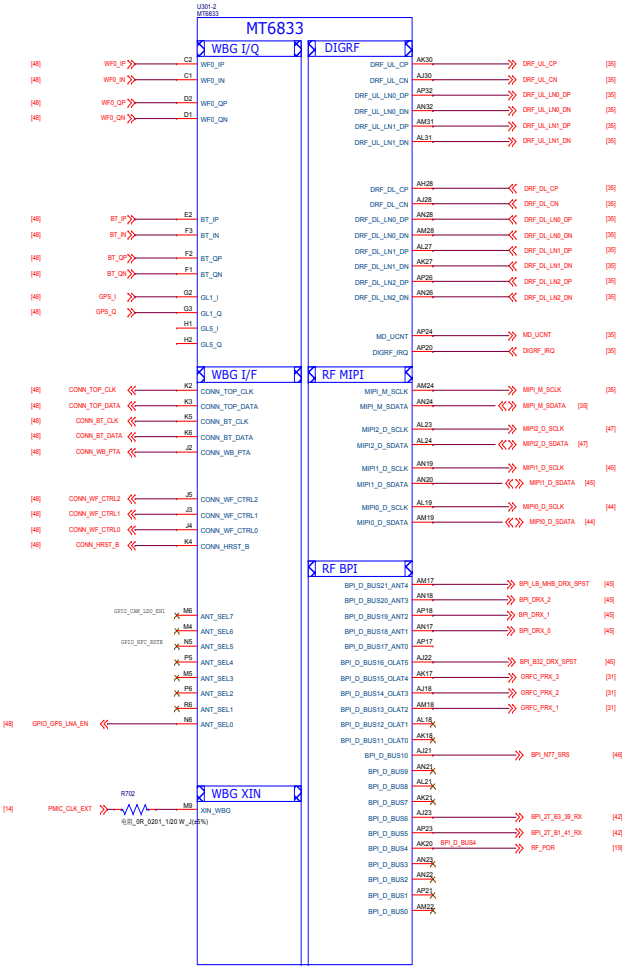


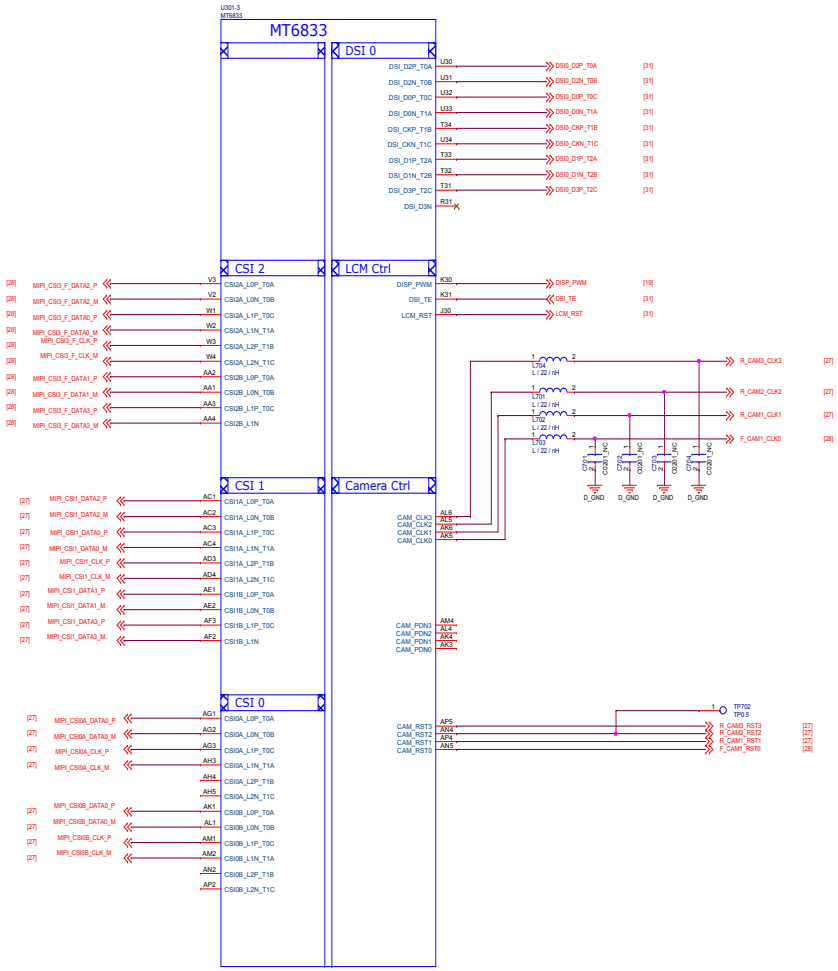


华勤通讯 Huaqin Telecom Technology Com.,Ltd

| Title | 07.BB_2 | |
|---|---|---|
| Size D | Project <Doc> | Rev V1 |
| Date: Tuesday, January 12, 2021 | Sheet 7 of 48 | |

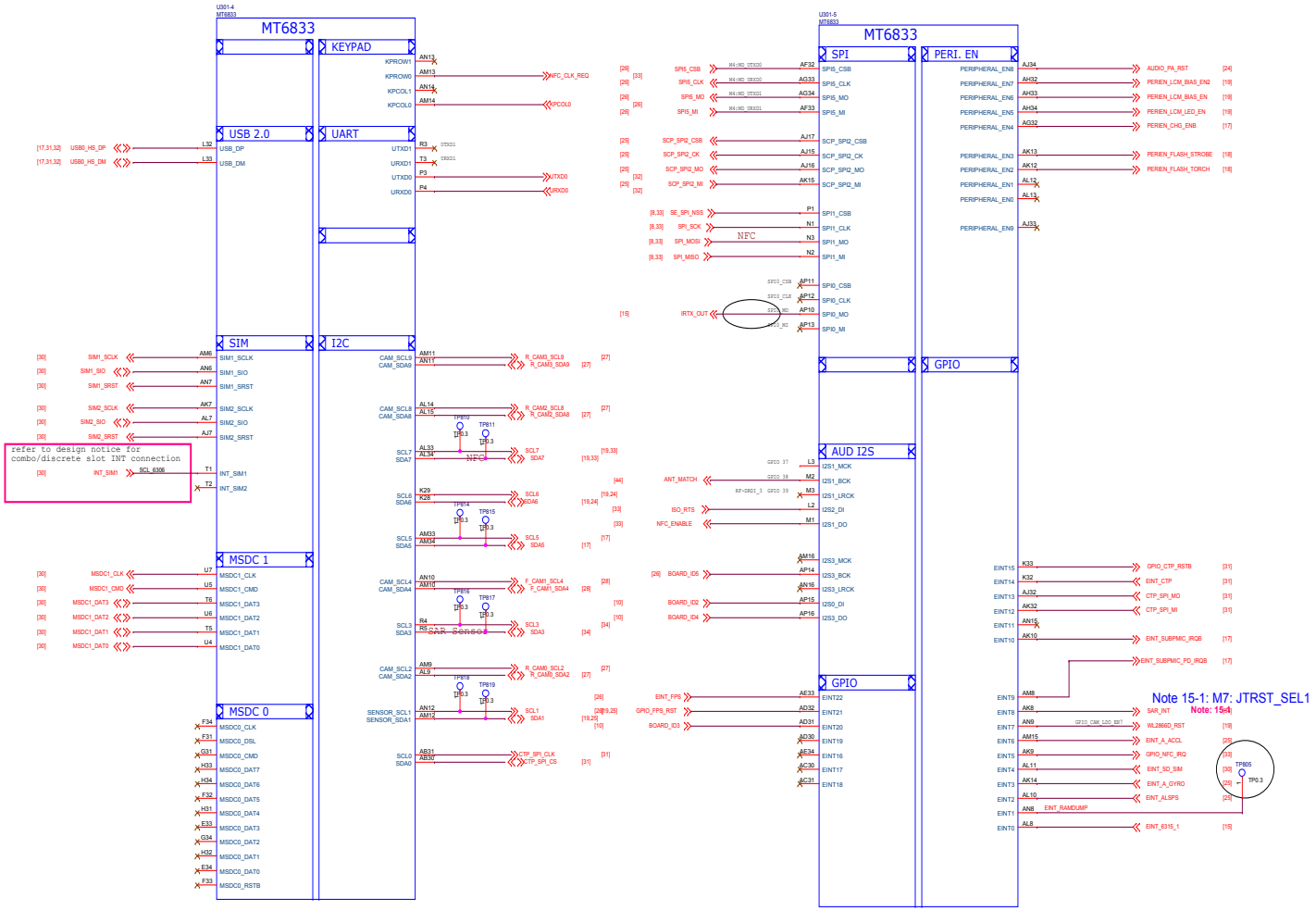


华勤通讯 Huaqin Telecom Technology Com.,Ltd

| Title | 08.BB_3 | |
|---|---|---|
| Size D | Project <Doc> | Rev V1 |
| Date: Tuesday, January 12, 2021 | Sheet 8 of 48 | |

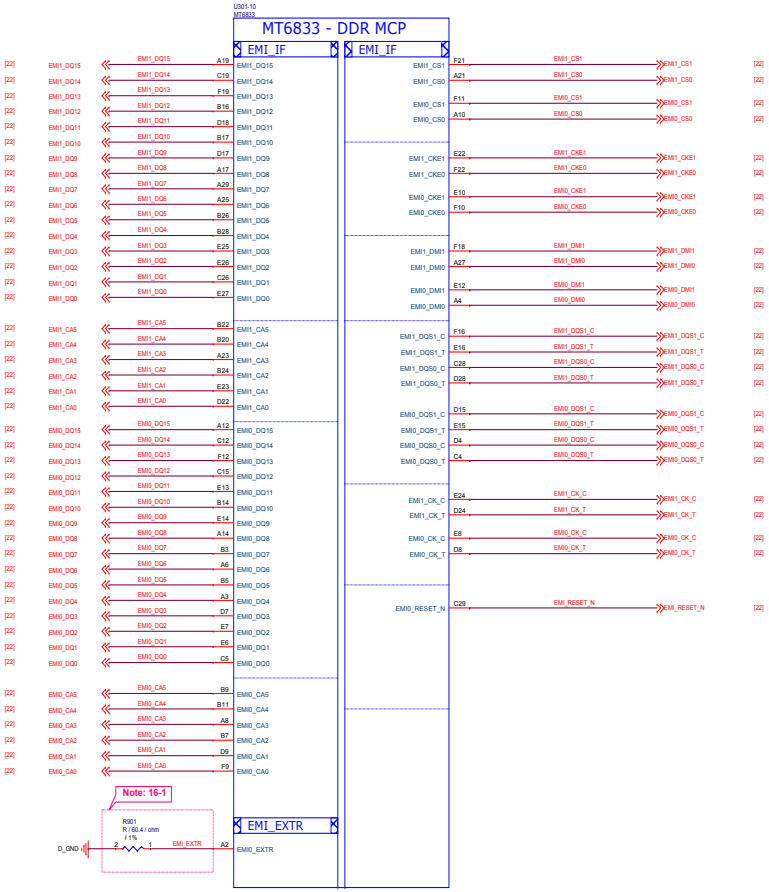


**Schematic design notice of "16_BB_4_Interface" page:**

Note 16-1: R4001 please select 60.4 ohm (1%) resistor

| | | |
|---|---|---|
| 华勤通讯 Huaqin Telecom Technology Com.,Ltd | | |
| Title 09.BB_4 | | |
| Size D | Project <Doc> | Rev V1 |
| Date: Tuesday, January 12, 2021 | Sheet 9 of 48 | |

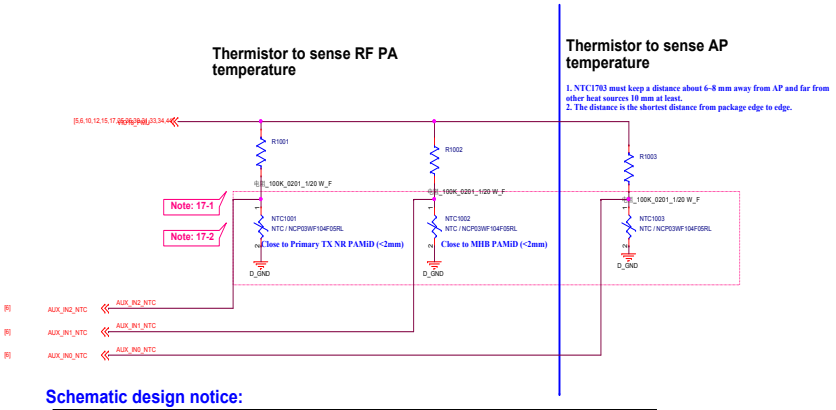


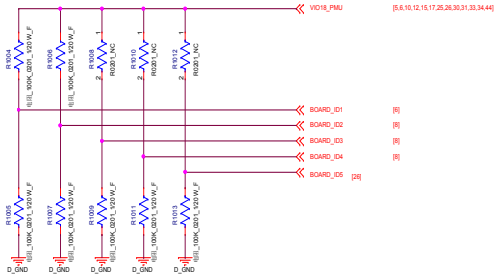


## Schematic design notice:

Note 17-1: SW Default Configuration is as followings
AUX_IN0_NTC is for AP Temp.
AUX_IN1_NTC is for MHB PAMiD Temp.
AUX_IN2_NTC is for NR PAMiD Temp.

Note 17-2: If your design or placement is different with SW Default Config.
Please refer to "MTXXXX Thermal User Manuel.docx" and modify SW setting.

| | | |
|---|---|---|
| 华勤通讯 Huaqin Telecom Technology Com.,Ltd | | |
| Title 10.BB_AUXADC_Thermal/BOARD_ID | | |
| Size D | Project <Doc> | Rev V1 |
| Date: Tuesday, January 12, 2021 | Sheet 10 of 48 | |

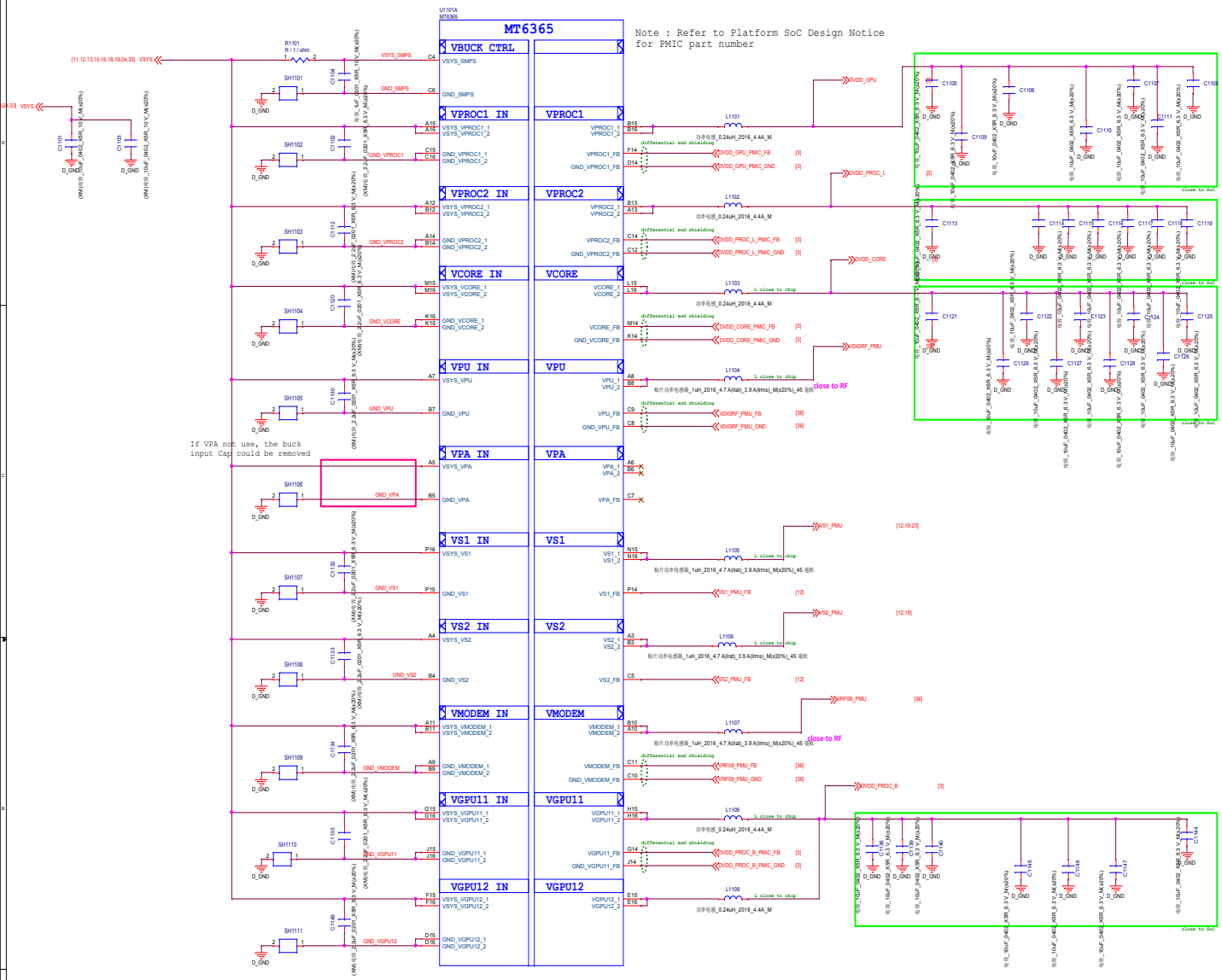


| Circuit Type | Buck Name (Application name) | Output Voltage Range (V) | Boot Default (V) | $I_{OUT-MAX}$ (mA) |
|---|---|---|---|---|
| Buck | VPROC1 (DVDD_GPU) | 0.40 ~ 1.19 (6.25mV/step) | ON (0.75) | 4800 |
| | VPROC2 (DVDD_PROC_L) | 0.40 ~ 1.19 (6.25mV/step) | ON (0.75) | 4800 |
| | VGPU11+12 (DVDD_PROC_B) | 0.40 ~ 1.19 (6.25mV/step) | ON (0.75) | 4800 *2 |
| | VCORE (DVDD_CORE) | 0.40 ~ 1.3 (6.25mV/step) | ON (0.75) | 4800 |
| | VMODEM (VRF09_PMU) | 0.50 ~ 1.10 (6.25mV/step) | OFF | 4800 |
| | VPU (VDIGRF_PMU) | 0.40 ~ 1.19 (12.5mV/step) | ON (0.7) | 2400 |
| | VS1 (VS1_PMU) | 1.86 ~ 2.20 (12.5mV/step) | ON (2.0) | 2200 |
| | VS2 (VS2_PMU) | 1.20 ~ 1.50 (12.5mV/step) | ON (1.35) | 2500 |
| | VPA (VPA_PMU) | 0.50 ~ 3.40 (50mV/step) | OFF | 1000 |

| | | |
|---|---|---|
| 华勤通讯 Huaqin Telecom Technology Com.,Ltd | | |
| Title | 11.POWER_MT6365_Buck | |
| Size D | Project <Doc> | Rev V1 |
| Date: Tuesday, January 19, 2021 | Sheet 11 of 48 | |

Note : Refer to Platform SoC Design Notice
for PMIC part number

1. "Typical Cap" defined in design notice is the minimum cap. to LDO Cout.
2. NC cap can move to application, if (PCB L<20nH, PCB R<0.2mohm)
=> value and placement of Cap, please refer design notice

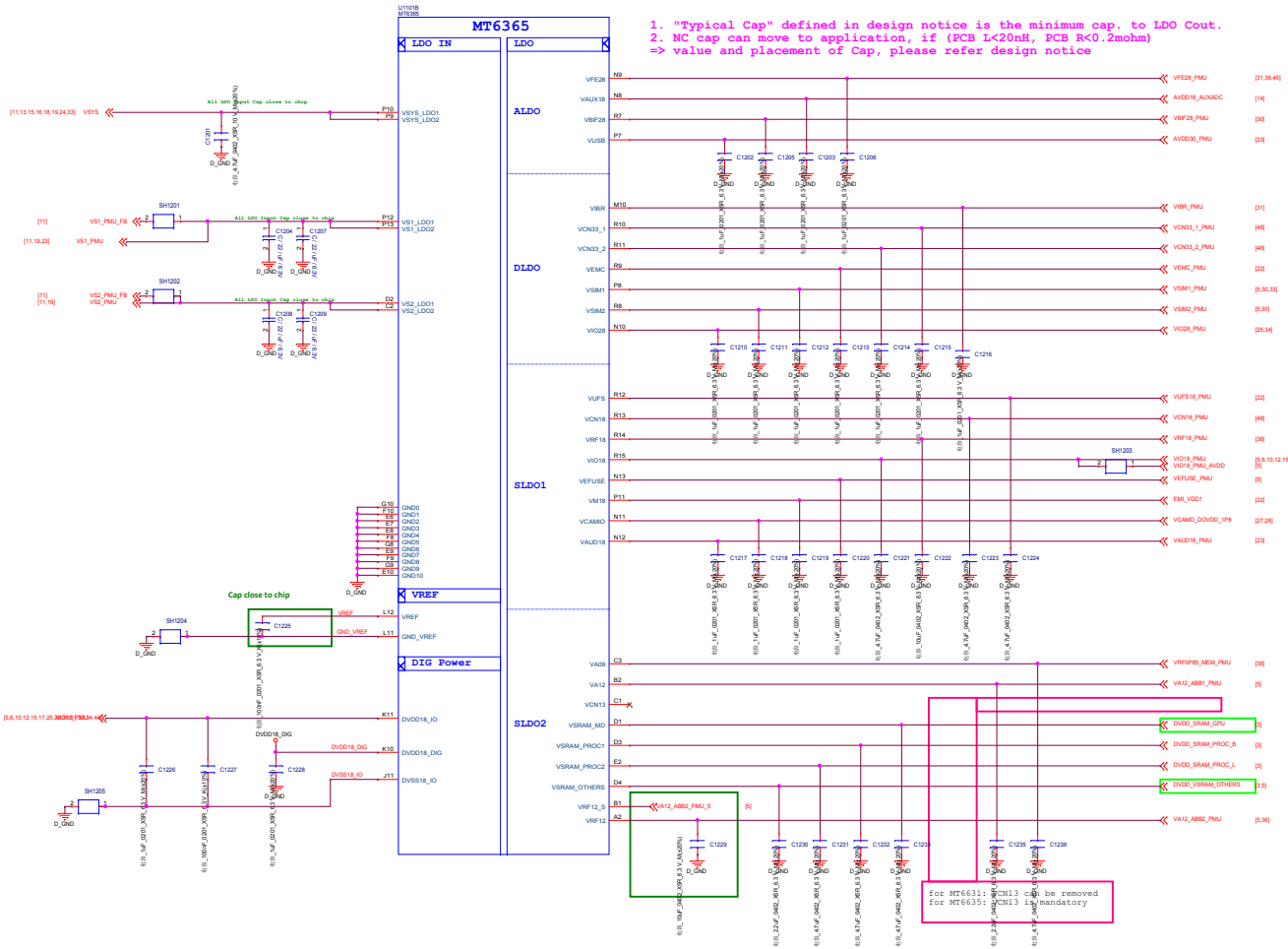


| Circuit Type | LDO Name | Output Voltage (V) | Boot Default (V) | $I_{OUT-MAX}$ (mA) | Expected use |
|---|---|---|---|---|---|
| ALDO | VFE28 | 2.80 | OFF (2.8) | 200 | RFFE |
| | VUSB | 3.07 | ON (3.07) | 200 | USB |
| | VAUX18 | 1.84 | ON (1.84) | 50 | AUXADC |
| | VXO22 | 2.24 | ON (2.24) | 25 | DCXO |
| | VBIF28 | 2.80 | OFF (2.8) | 50 | Battery Interface |
| VRTC | VRTC | 2.80 | ON (2.8) | 2 | RTC |
| VDIG | DVDD18_DIG | 1.80 | ON (1.8) | 10 | PMIC Digital |

| Circuit Type | LDO Name | Output Voltage (V) | Boot Default (V) | $I_{OUT-MAX}$ (mA) | Expected use |
|---|---|---|---|---|---|
| DLDO | VSIM1 | 1.7/1.8/1.86/ 2.76/3.0/3.1 | OFF (1.86) | 200 | SIM |
| | VSIM2 | 1.7/1.8/1.86/ 2.76/3.0/3.1 | OFF (1.86) | 200 | SIM |
| | VCN33_1 | 3.3/3.4/3.5/3.6 | OFF (3.3) | 800 | Connectivity |
| | VCN33_2 | 3.3/3.4/3.5/3.6 | OFF (3.3) | 800 | Connectivity |
| | VEMC | 2.55/2.9/3.0/3.3 | ON (3.0) | 800 | eMMC / UFS |
| | VIO28 | 2.8/2.9/3.0/ 3.1/3.2/3.3 | OFF (2.8) | 200 | IO & Sensor |
| | VIBR | 2.7/2.8/3/3.3 | OFF (2.8) | 200 | Vibrator |

| Circuit Type | LDO Name | Output Voltage (V) | Boot Default (V) | $I_{OUT-MAX}$ (mA) | Expected use |
|---|---|---|---|---|---|
| SLDO1 | VEFUSE | 1.80 | OFF (1.8) | 300 | EFUSE |
| | VAUD18 | 1.80 | ON (1.8) | 300 | Audio |
| | VCAMIO | 1.80 | OFF (1.8) | 300 | Camera IO |
| | VM18 | 1.80 | ON (1.8) | 300 | DRAM |
| | VRF18 | 1.80 | OFF (1.8) | 450 | RF |
| | VIO18 | 1.80 | ON (1.8) | 600 | IO & Sensor |
| | VCN18 | 1.80 | OFF (1.8) | 1200 | Connectivity |
| | VUFS | 1.86 | ON (1.86) | 1200 | eMMC / UFS |
| DCXO LDO | VRFCK | 1.40 @ boot 1.60 @ work | ON (1.4) | 10 | DCXO |
| | VBBCK | 1.24 | ON (1.24) | 10 | DCXO |

| Circuit Type | LDO Name | Output Voltage (V) | Boot Default (V) | $I_{OUT-MAX}$ (mA) | Expected use |
|---|---|---|---|---|---|
| SLDO2 | VA09 | 0.85 | ON (0.85) | 300 | DIGRF SRAM (VRF0P85_MEM_PMU) |
| | VA12 | 1.2 | ON (1.2) | 300 | AP Analog Module |
| | VCN13 | 1.3 | OFF (1.3) | 350 | Connectivity |
| | VSRAM_PROC1 | 0.60 ~ 1.2 (6.25mV/step) | ON (0.85) | 600 | CPUB SRAM |
| | VSRAM_PROC2 | 0.60 ~ 1.2 (6.25mV/step) | ON (0.85) | 600 | CPUL SRAM |
| | VSRAM_OTHERS | 0.60 ~ 1.2 (6.25mV/step) | ON (0.75) | 600 | OTHERS SRAM |
| | VSRAM_MD | 0.60 ~ 1.2 (6.25mV/step) | ON (0.85) | 600 | GPU SRAM |
| | VRF12 | 1.2 | ON (1.2) | 800 | AP Analog Module |

MEDIATEK CONFIDENTIAL
Do not forward or distribute without permission

| | | |
|---|---|---|
| 华勤通讯 Huaqin Telecom Technology Com.,Ltd | | |
| Title 12.POWER_MT6365_LDO | | |
| Size D | Project <Doc> | Rev V1 |
| Date: Tuesday, January 12, 2021 | Sheet 12 of 48 | |

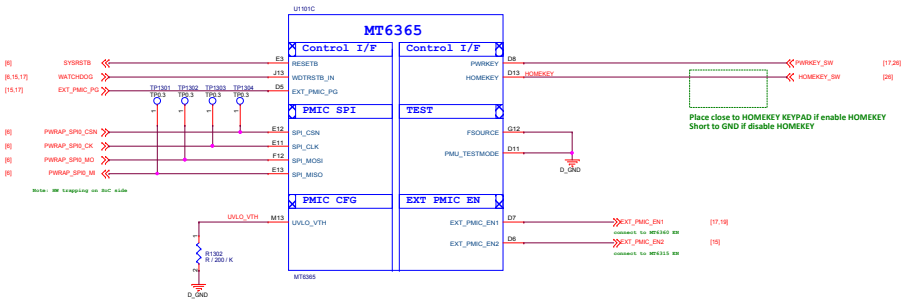


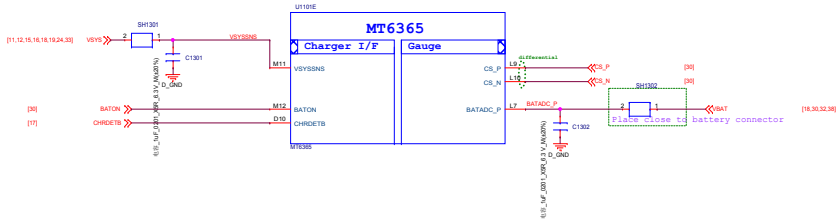


| | | |
|---|---|---|
| 华勤通讯 Huaqin Telecom Technology Com.,Ltd | | |
| Title | 13.POWER_MT6365_General | |
| Size D | Project <Doc> | Rev V1 |
| Date: Tuesday, January 12, 2021 | Sheet 13 of 48 | |

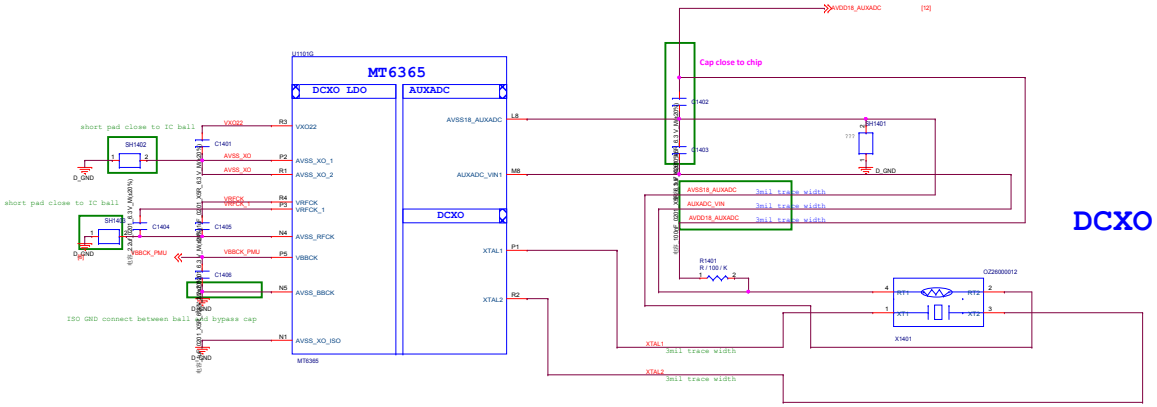


Route XTAL1/ XTAL2/ AVDD18_AUXADC/ AUXADC_VIN/ AVSS18_AUXADC with 3mils width traces and well GND shielding.

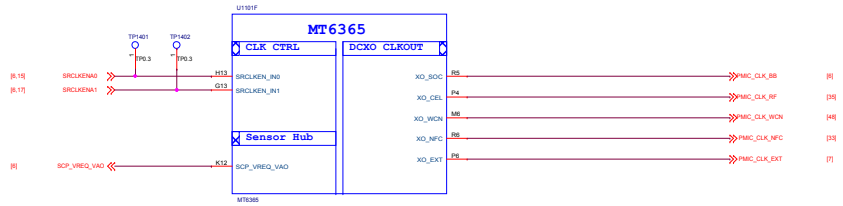


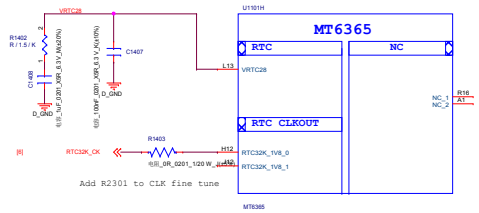


| | | |
|---|---|---|
| 华勤通讯 Huaqin Telecom Technology Com.,Ltd | | |
| Title | 14.POWER_MT6365_Clock | |
| Size D | Project <Doc> | Rev V1 |
| Date: Tuesday, January 12, 2021 | Sheet 14 of 48 | |

## MT6315 4-Phase Buck (MD)

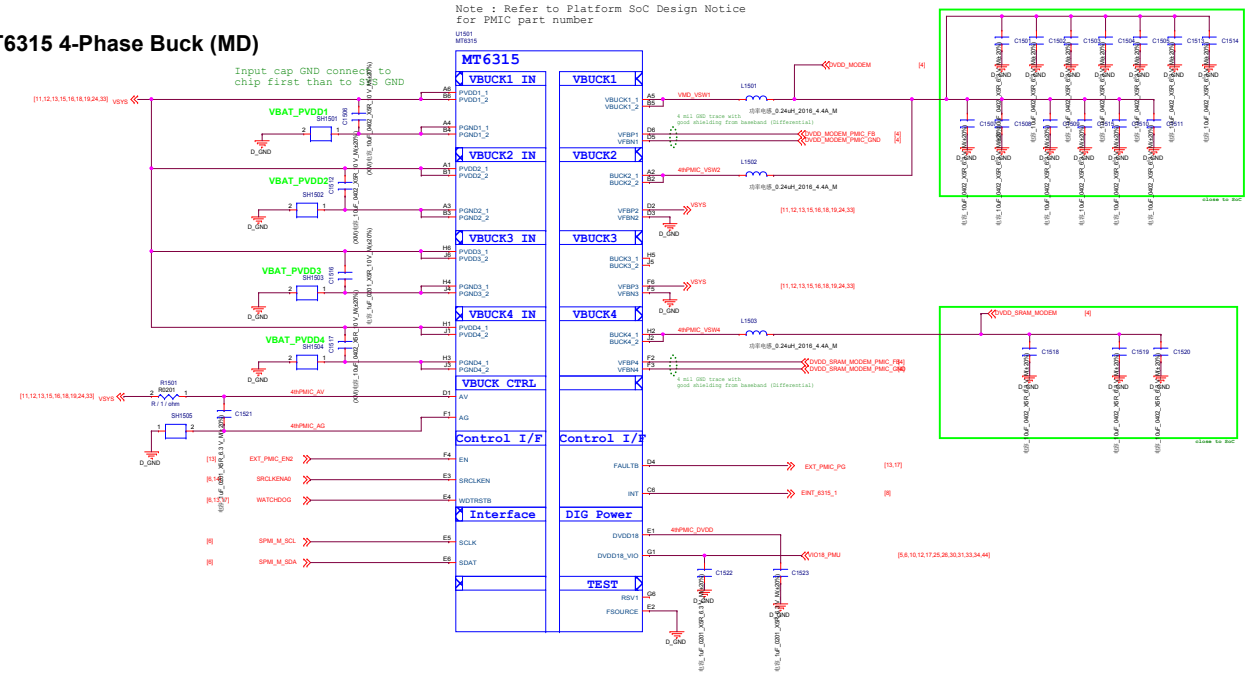


| MT6315NP/B | Output Voltage Range (V) | Boot Default (V) | $I_{OUT-MAX}$ (mA) | Expected use |
|---|---|---|---|---|
| BUCK1+2 | 0.40 ~ 1.19375 (6.25mV/step) | ON (0.825) | 5000*2 | DVDD_MODEM |
| BUCK3 | 0.40 ~ 1.19375 (6.25mV/step) | ON (0.75) | 5000 | -- |
| BUCK4 | 0.40 ~ 1.19375 (6.25mV/step) | ON (0.825) | 5000 | DVDD_SRAM_MODEM |

## IR LED

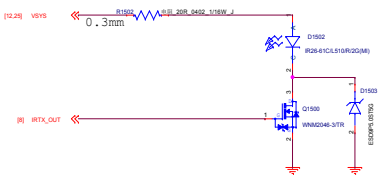


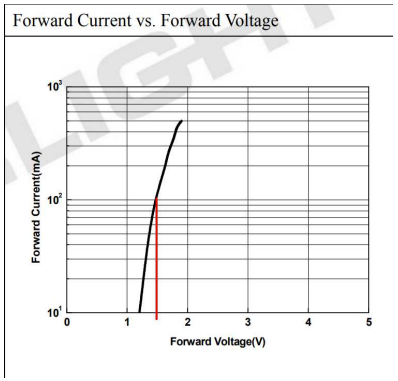


| | | |
|---|---|---|
| 华勤通讯 Huaqin Telecom Technology Com.,Ltd | | |
| Title 15.POWER_MT6315_VMD/IR_LED | | |
| Size D | Project <Doc> | Rev V1 |
| Date: Tuesday, January 12, 2021 | Sheet 15 of 48 | |

Note : Refer to Platform SoC Design Notice
for PMIC part number

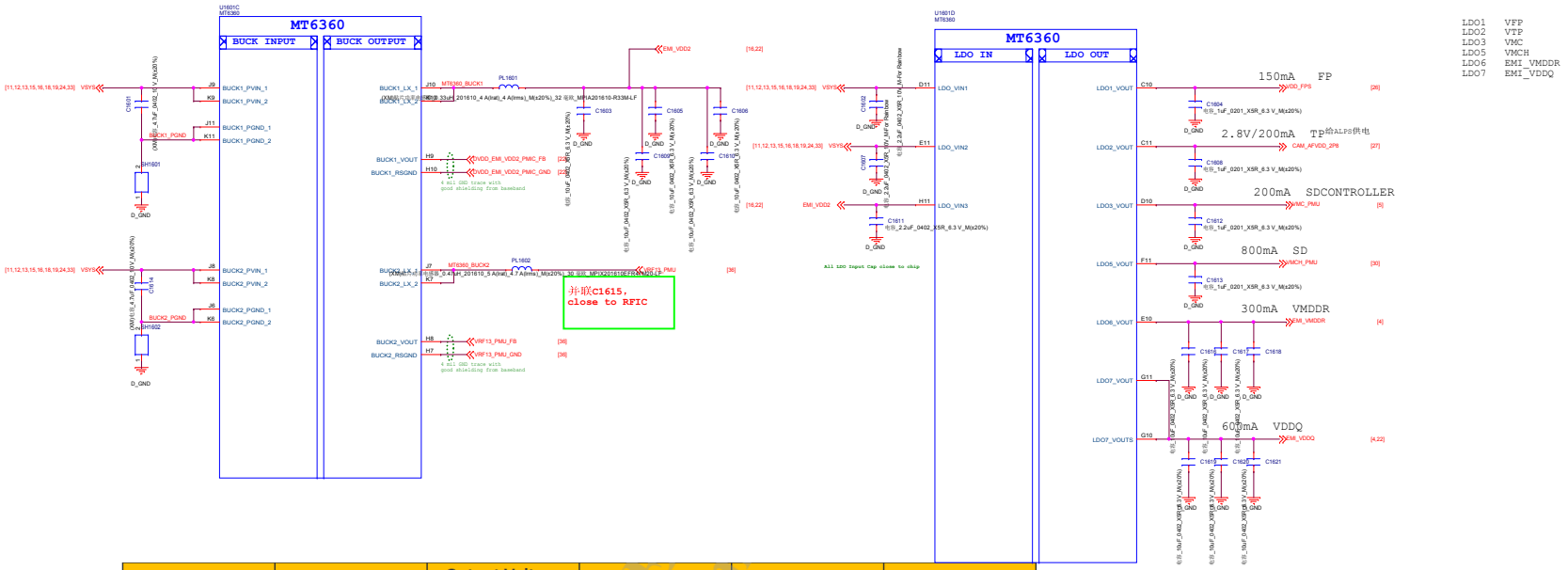


| Circuit Type | Name | Output Voltage Range (V) | Boot Default (V) | $I_{OUT-MAX}$ (mA) | Expected use |
|---|---|---|---|---|---|
| Buck | BUCK1 | 0.3 ~ 1.3 (5mV/step) | ON (1.125) | 3000 | EMI_VDD2 |
| | BUCK2 | 0.3 ~ 1.3 (5mV/step) | OFF (1.3) | 3000 | VRF13_PMU |

| Circuit Type | Name | Output Voltage (V) | Boot Default (V) | $I_{OUT-MAX}$ (mA) | Expected use |
|---|---|---|---|---|---|
| LDO | LDO1 | 1.8/2.0/2.1/2.5/2.7/2.8/2.9/3.0/3.1/3.3 | OFF (1.8) | 150 | Fingerprint |
| | LDO2 | 1.8/2.0/2.1/2.5/2.7/2.8/2.9/3.0/3.1/3.3 | OFF (1.8) | 200 | Touch Panel |
| | LDO3 | 1.8/2.9/2.8/3.0/3.3 | OFF (3.0) | 200 | SD Card |
| | LDO5 | 2.9/3.0/3.3 | OFF (3.0) | 800 | SD Card |
| | LDO6 | 0.75 | ON (0.75) | 300 | EMI_VMDDR |
| | LDO7 | 0.6 | ON (0.6) | 600 | EMI_VDDQ |

MEDIATEK CONFIDENTIAL
Zhenhua@huaqin.com

华勤通讯 Huaqin Telecom Technology Com.,Ltd

| Title | 16.POWER_MT6360_BUCK_LDO* | |
|---|---|---|
| Size D | Project <Doc> | Rev V1 |
| Date: Tuesday, January 12, 2021 | Sheet 16 of 48 | |

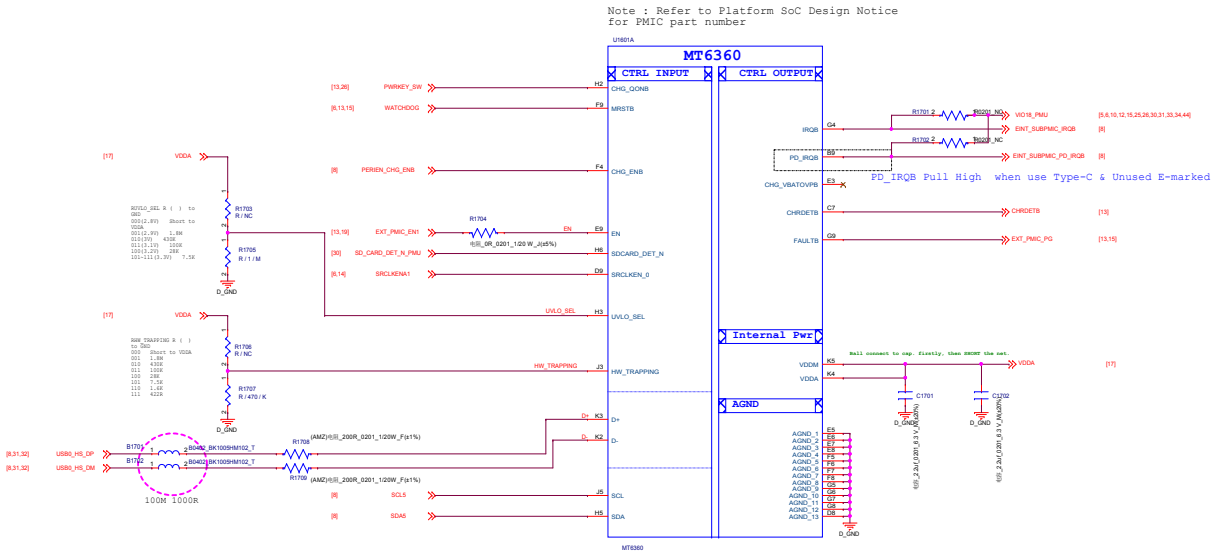


| | | |
|---|---|---|
| 华勤通讯 Huaqin Telecom Technology Com.,Ltd | | |
| Title 17.POWER_MT6360_General | | |
| Size D | Project <Doc> | Rev V1 |
| Date: Tuesday, January 12, 2021 | Sheet 17 of 48 | |

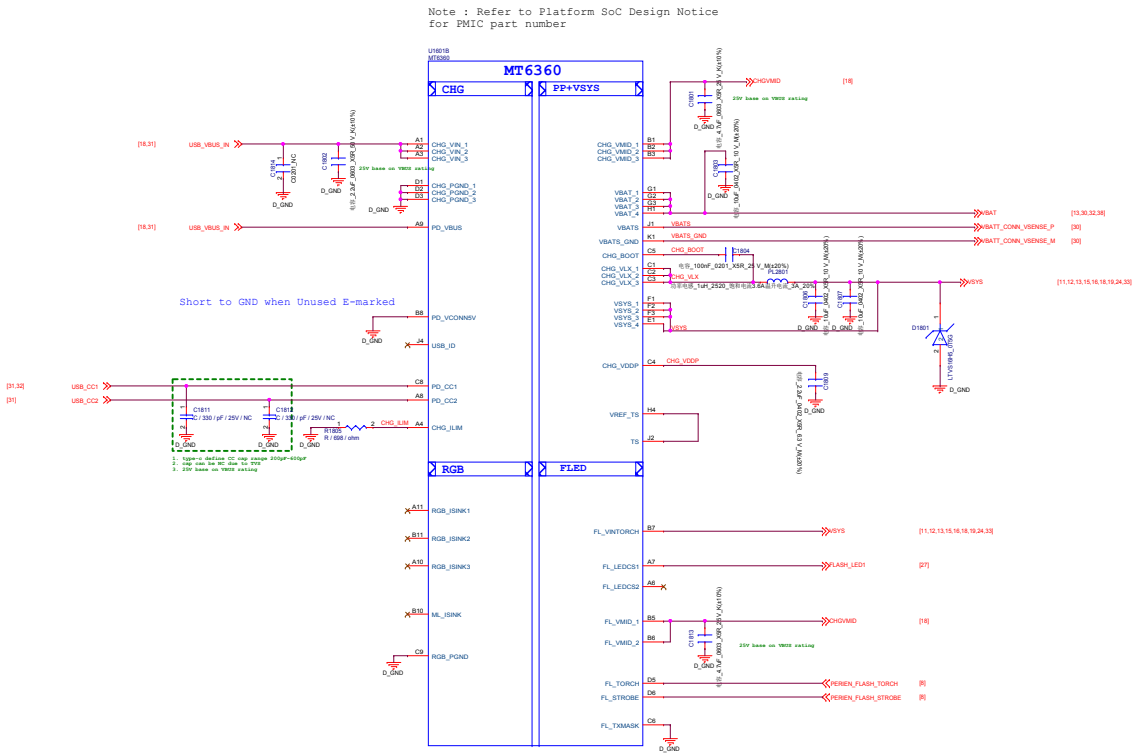


**Schematic design notice of "28_POWER_MT6360_Charger" page.**

Note 28-1: For better ESD & surge performance we need choose suitable device for system protection. Please refer to the latest version of [Surge device selection guide] provided by MTK.

| | | |
|---|---|---|
| 华勤通讯 Huaqin Telecom Technology Com.,Ltd | | |
| Title | 18.POWER_MT6360_Charger | |
| Size D | Project <Doc> | Rev V1 |
| Date: Tuesday, January 12, 2021 | Sheet 18 of 48 | |

## LCM Backlight LED Driver

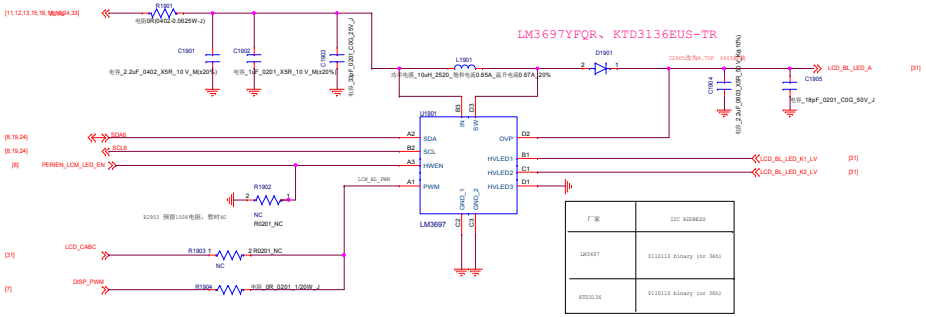


| 厂家 | I2C ADDRESS |
|---|---|
| LM3697 | 0110110 binary (or 36h) |
| KTD3136 | 0110110 binary (or 36h) |

| 厂家 | I2C ADDRESS |
|---|---|
| WL2866D | 0x50H |
| ETS904 | 0x50H |

## LCM Bias

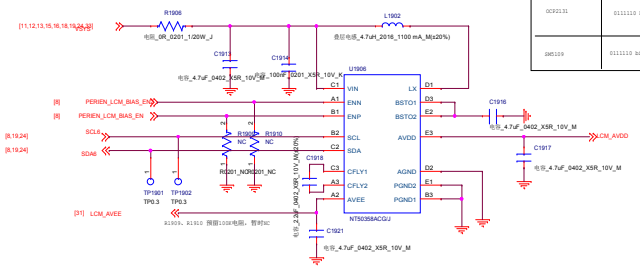


| 厂家 | I2C ADDRESS |
|---|---|
| OCP2131 | 0111110 binary (or 3Eh) |
| SM5109 | 0111110 binary (or 3Eh) |

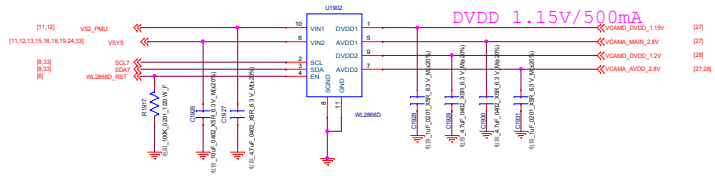


## External VIO18_LDO: option for power leakage from UART port on product line

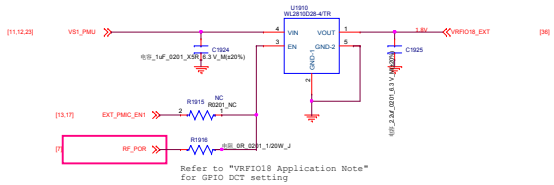


| | | |
|---|---|---|
| 华勤通讯 Huaqin Telecom Technology Com.,Ltd | | |
| Title 19.POWER_EXT | | |
| Size D | Project <Doc> | Rev V1 |
| Date: Tuesday, January 12, 2021 | Sheet 19 of 48 | |

| | | |
|---|---|---|
| 华勤通讯 Huaqin Telecom Technology Com.,Ltd | | |
| Title | PM7250B_CHARGE/FG | |
| Size E | Project <Doc> | Rev V1 |
| Date: Tuesday, January 12, 2021 | Sheet 20 of 48 | |

| | | |
|---|---|---|
| 华勤通讯 Huaqin Telecom Technology Com.,Ltd | | |
| Title | PM7250B_MISC/GPIO/GND | |
| Size D | Project <Doc> | Rev V1 |
| Date: Tuesday, January 12, 2021 | Sheet 21 of 48 | |

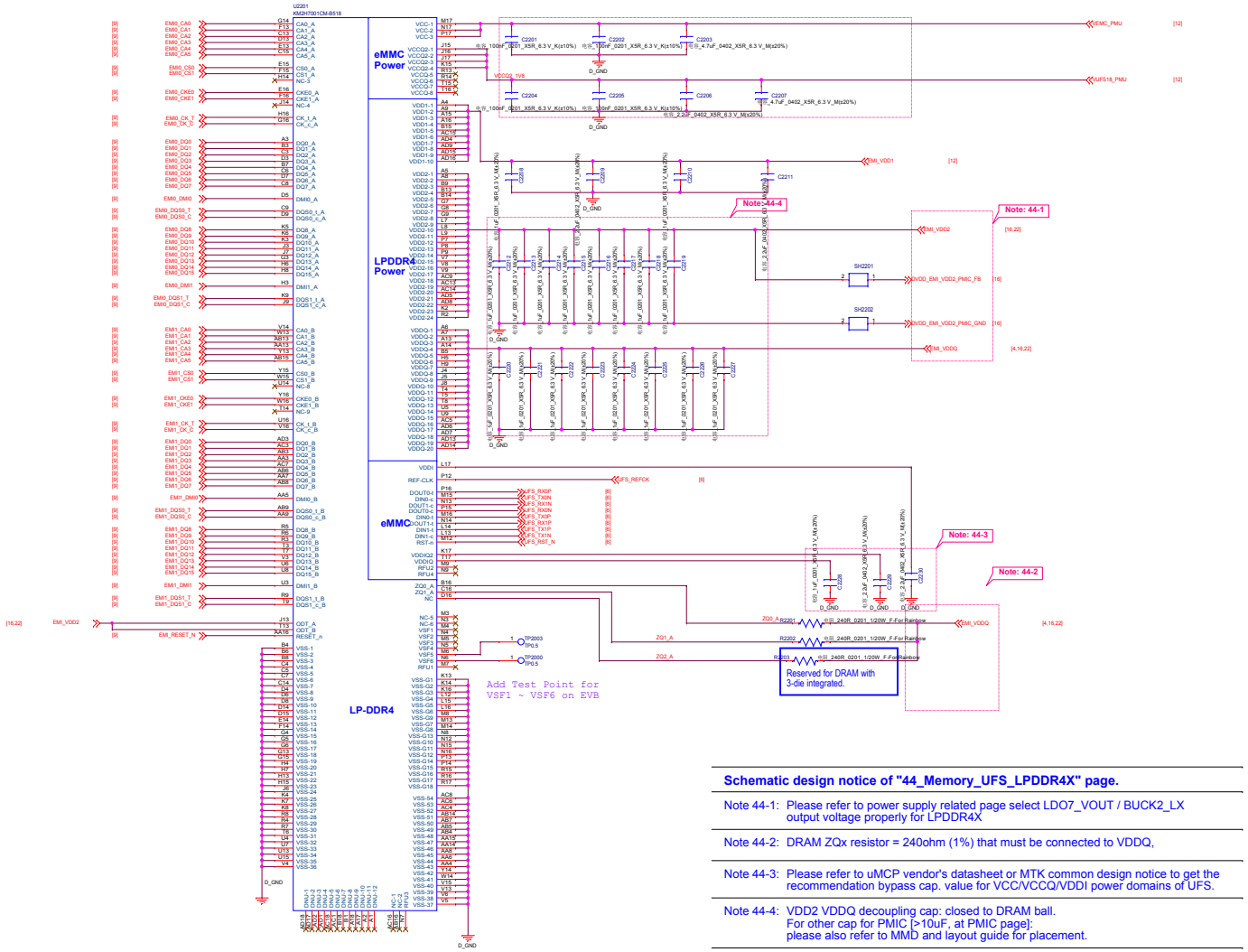


**Schematic design notice of "44_Memory_UFS_LPDDR4X" page.**

Note 44-1: Please refer to power supply related page select LDO7_VOUT / BUCK2_LX output voltage properly for LPDDR4X

Note 44-2: DRAM ZQx resistor = 240ohm (1%) that must be connected to VDDQ,

Note 44-3: Please refer to uMCP vendor's datasheet or MTK common design notice to get the recommendation bypass cap. value for VCC/VCCQ/VDDI power domains of UFS.

Note 44-4: VDD2 VDDQ decoupling cap: closed to DRAM ball.
For other cap for PMIC [>10uF, at PMIC page]:
please also refer to MMD and layout guide for placement.

| | | |
|---|---|---|
| 华勤通讯 Huaqin Telecom Technology Com.,Ltd | | |
| Title 22.Memory_UFS_LPDDR4X | | |
| Size D | Project <Doc> | Rev V1 |
| Date: Tuesday, January 12, 2021 | Sheet 22 of 48 | |

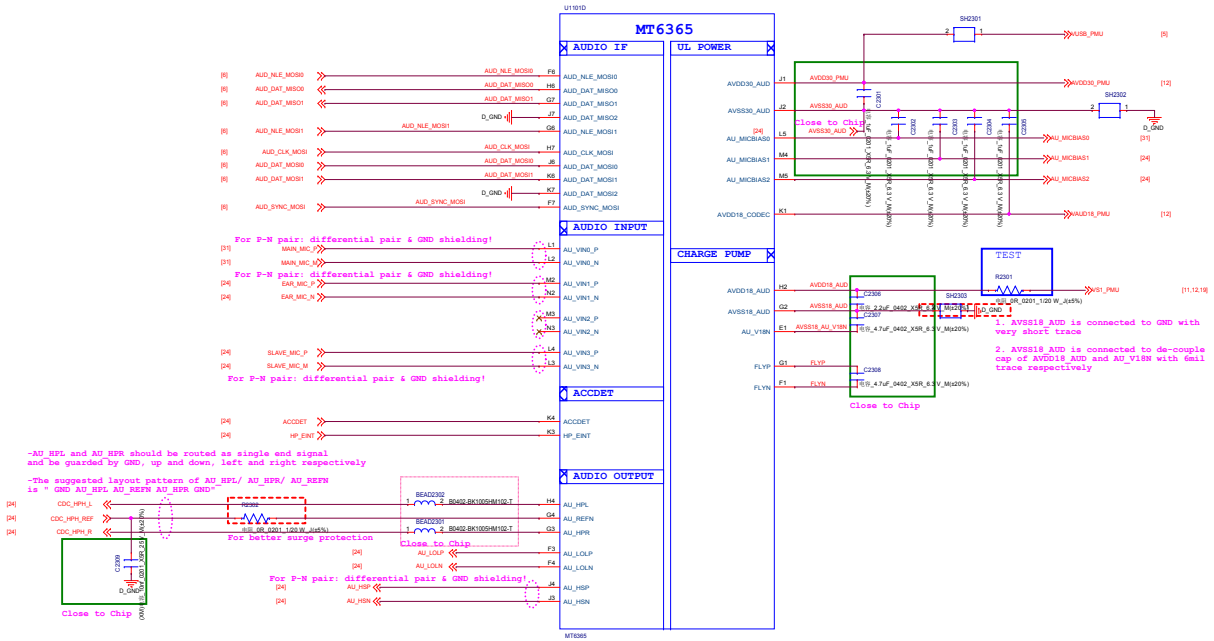


| | | | |
|---|---|---|---|
| 华勤通讯 Huaqin Telecom Technology Com.,Ltd | | | |
| Title | 23.PERI_AUDIO_PMIC-IF | | |
| Size D | Project <Doc> | | Rev V1 |
| Date: Tuesday, January 12, 2021 | | Sheet 23 of 48 | |

# Earphone Microphone

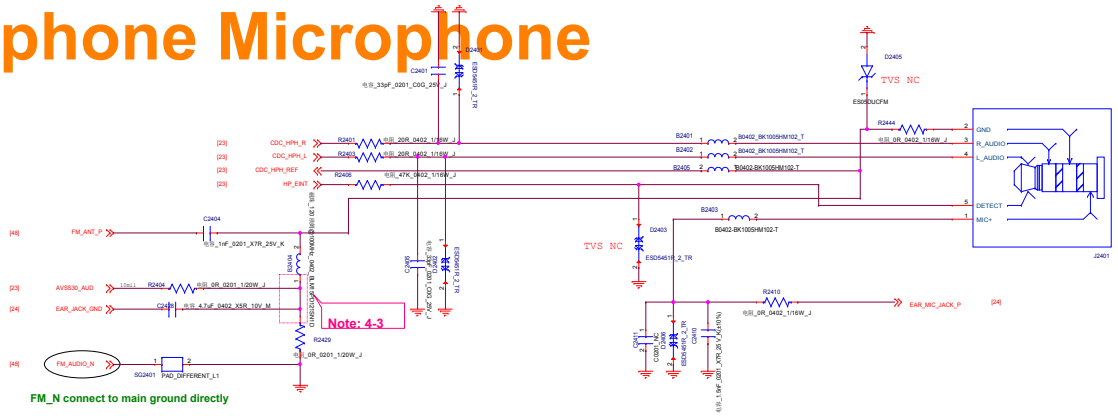


## Earphone Microphone

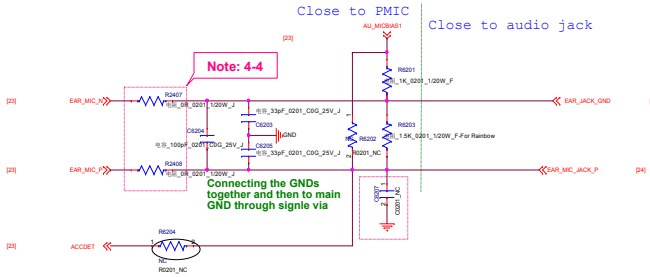


Note 4-3:

| | Earphone Jack @ Main board | Earphone Jack @ Sub board |
|---|---|---|
| FA504_2 | 0 ohm | 100nF |

Note 4-4:

1. Need do SW configuration for DCC mode
2. Analog input impedance is as below, please customer check the detail requirement with mic vendor if the mic used has special requirement on the input impedance of analog input

| MT6357 | UL Mode | MIN | TYP | MAX | Unit |
|---|---|---|---|---|---|
| C | DCC | - | - | 1p | F |

# RECIVER

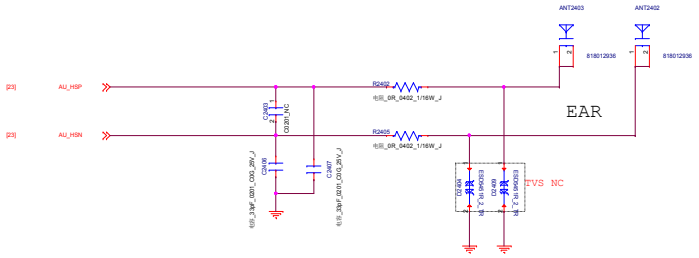


# SPEAKER

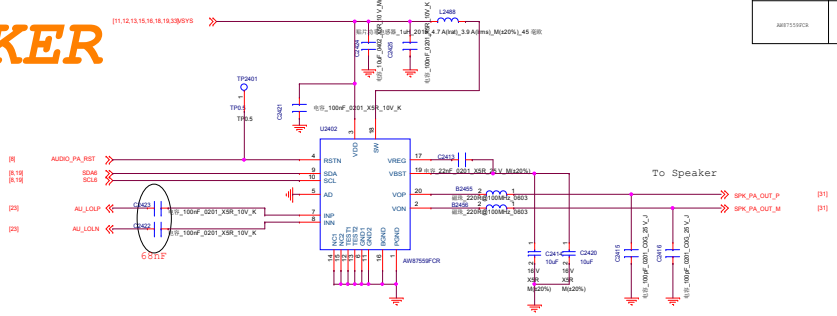


| 厂家 | I2C ADDRESS |
|---|---|
| AW87559FCR | 0X58(7 bit) |

# Slave MIC

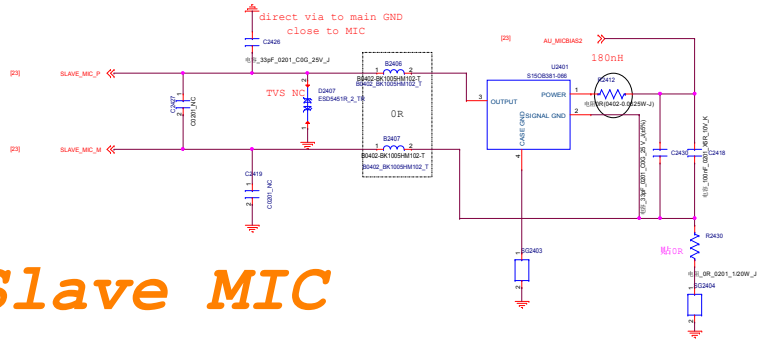


| | | |
|---|---|---|
| 华勤通讯 Huaqin Telecom Technology Com.,Ltd | | |
| Title | 24.MIC/RCV/SPK/Earphone | |
| Size D | Project <Doc> | Rev V1 |
| Date: Tuesday, January 19, 2021 | Sheet 24 of 48 | |

# eCOMPASS

## M-Sensor

| 厂家 | I2C ADDRESS |
|---|---|
| AKM9918C | 0ch |
| QMC6308-TR | 2ch |

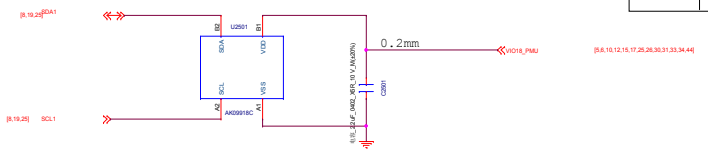


# A+Gsensor

default SPI (if sensor hub support)

| 厂家 | I2C ADDRESS |
|---|---|
| BMI220 | |
| ICM-40607-A | |

Gyro+A sensor

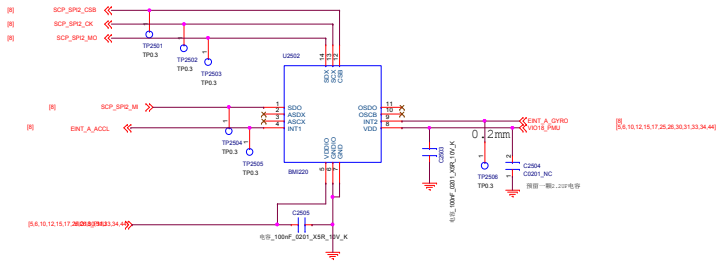


# ALS+PS

| 厂家 | I2C ADDRESS |
|---|---|
| STK33552 | 0x46 |

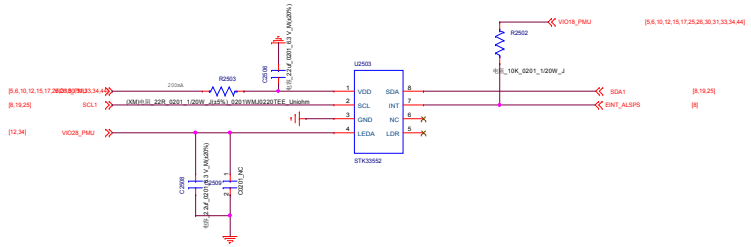


## 后光感 BU27030NUC

| 厂家 | I2C ADDRESS |
|---|---|
| BU27030NUC | 0x38 |

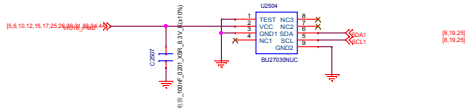


| | | |
|---|---|---|
| 华勤通讯 Huaqin Telecom Technology Com.,Ltd | | |
| Title | 25.SENSOR | |
| Size D | Project <Doc> | Rev V1 |
| Date: Tuesday, January 12, 2021 | Sheet 25 of 48 | |

## Finger Print

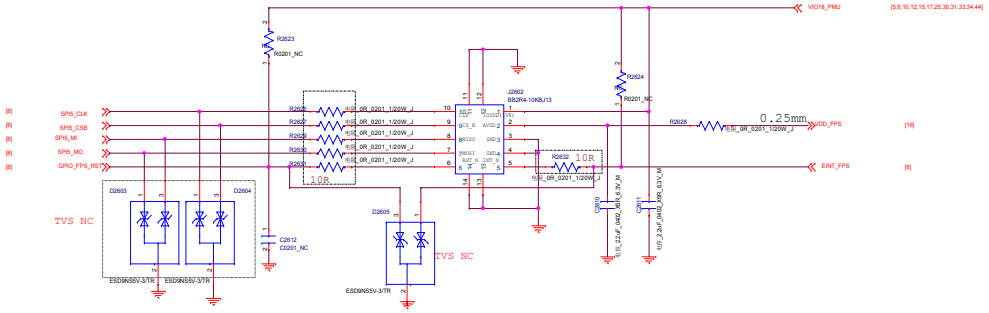


## KEY BTB

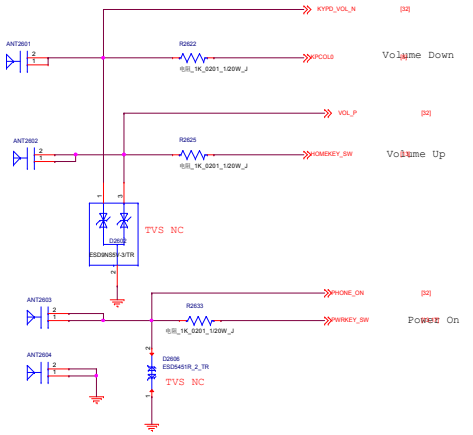


| | | |
|---|---|---|
| 华勤通讯 Huaqin Telecom Technology Com.,Ltd | | |
| Title | 26.FP/KEY | |
| Size D | Project <Doc> | Rev V1 |
| Date: Tuesday, January 12, 2021 | Sheet 26 of 48 | |

注意：AGND AFGND都要单独下主地

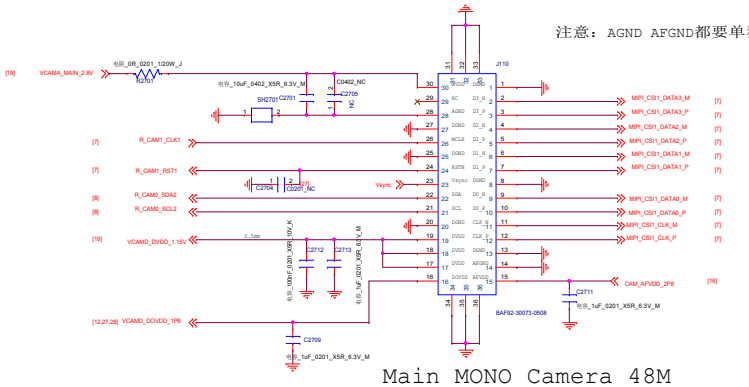


Main MONO Camera 48M

微 距 Camera 2M =Macro

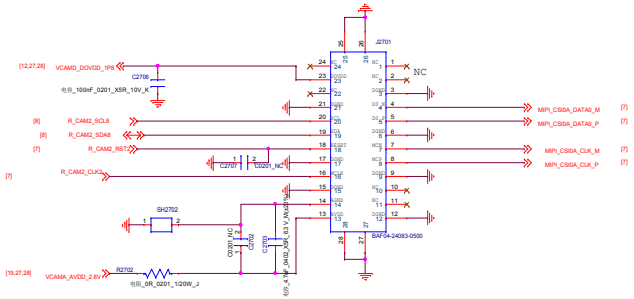


景 深 Camera 2M=Depth

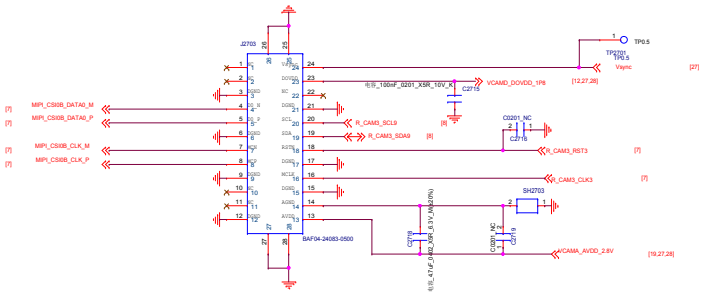


**Flash LED 5V Boost**

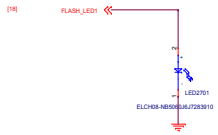


*Flash 下方地要完整且足够大，散热一定要好*

| | | |
|---|---|---|
| 华勤通讯 Huaqin Telecom Technology Com.,Ltd | | |
| Title 27.REAR_CAM | | |
| Size D | Project <Doc> | Rev V1 |
| Date: Tuesday, January 12, 2021 | Sheet 27 of 48 | |

## Front Camera - 8M

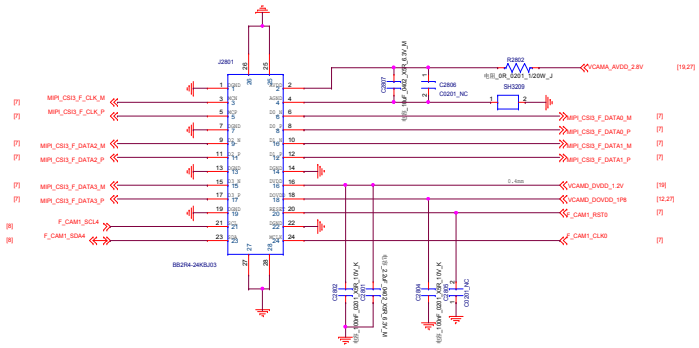


| | | |
|---|---|---|
| 华勤通讯 Huaqin Telecom Technology Com.,Ltd | | |
| Title 28.FRONT_CAM | | |
| Size D | Project <Doc> | Rev V1 |
| Date: Tuesday, January 12, 2021 | Sheet 28 of 48 | |

| | | |
|---|---|---|
| 华勤通讯 Huaqin Telecom Technology Com.,Ltd | | |
| Title | Sub_Charger_SMB1396 | |
| Size D | Project <Doc> | Rev V1 |
| Date: Tuesday, January 12, 2021 | Sheet 29 of 48 | |

# 3选2卡座

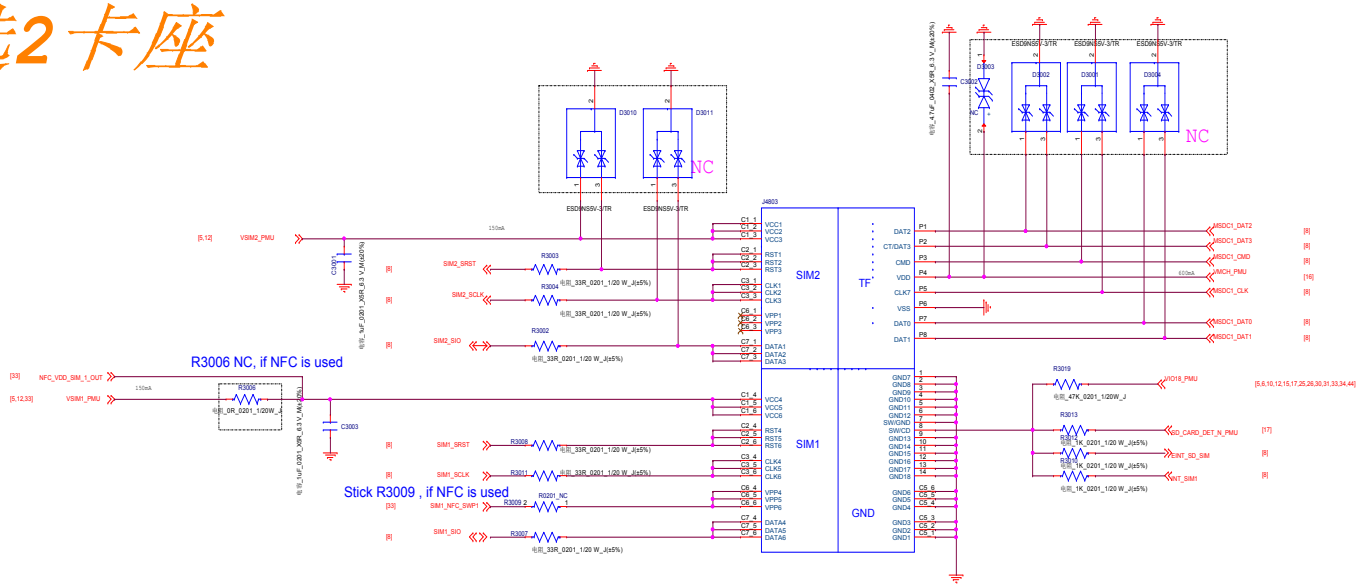


# BATT CON

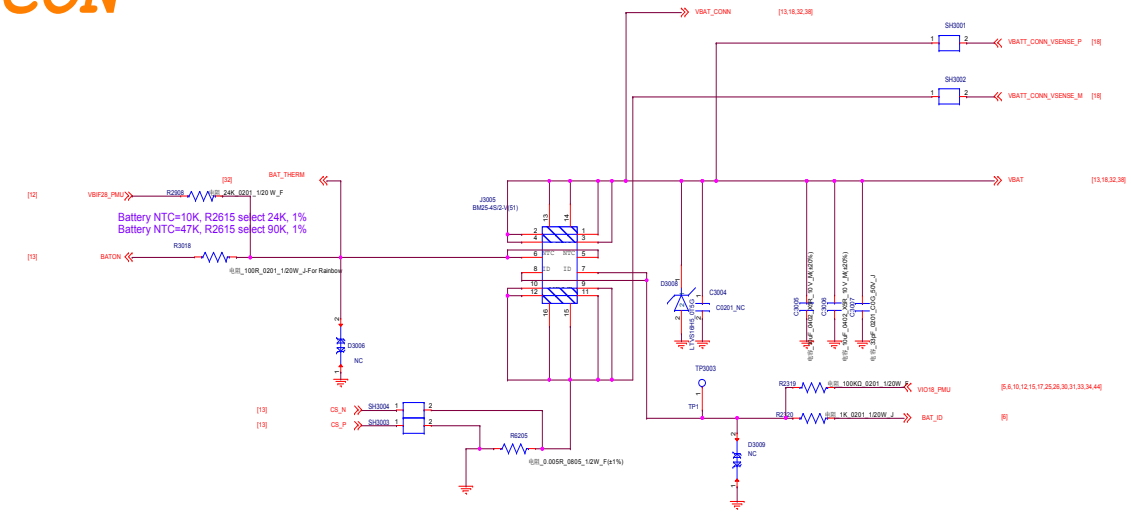


| | | |
|---|---|---|
| 华勤通讯 Huaqin Telecom Technology Com.,Ltd | | |
| Title | 30.SIM/BATT | |
| Size D | Project <Doc> | Rev V1 |
| Date: Tuesday, January 12, 2021 | Sheet 30 of 48 | |

# LINK

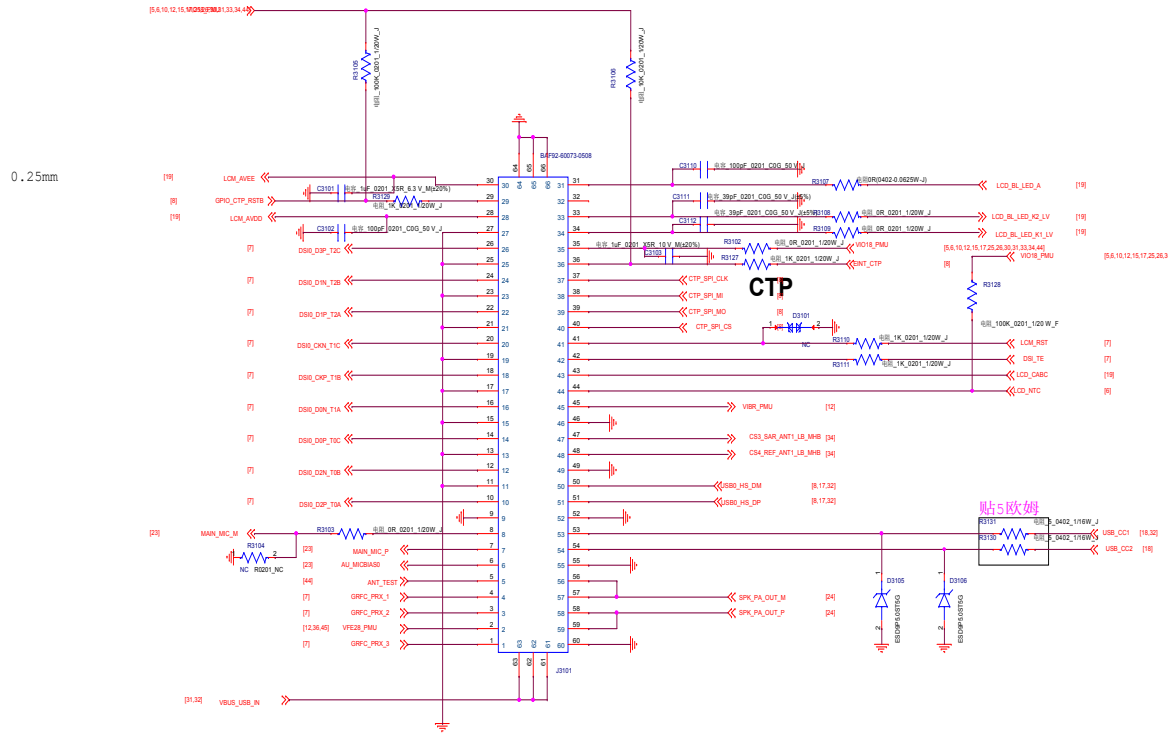


# OVP

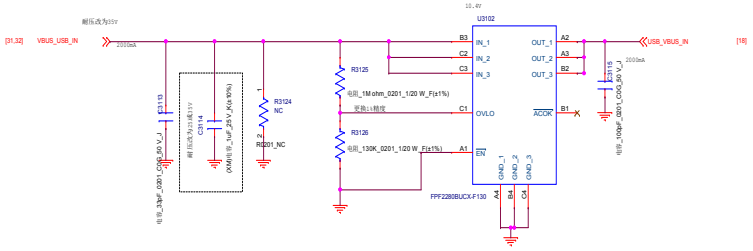


| | | |
|---|---|---|
| 华勤通讯 Huaqin Telecom Technology Com.,Ltd | | |
| Title | 31.60PIN_LCD_LINK/OVP | |
| Size D | Project <Doc> | Rev V1 |
| Date: Tuesday, January 12, 2021 | Sheet 31 of 48 | |

VBAT TEST POINT

VBAT

KEY BTB

KEYPAD

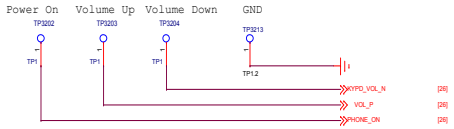


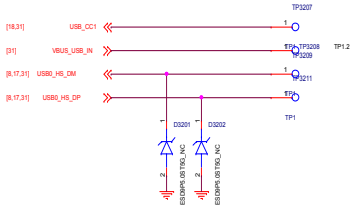


VCHG

UART TP

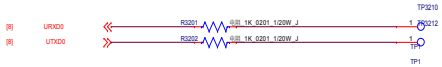


JTAG

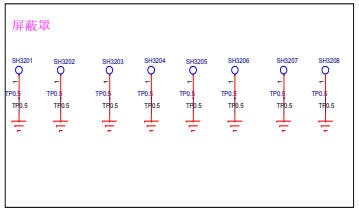


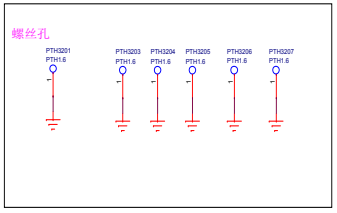


| | | |
|---|---|---|
| 华勤通讯 Huaqin Telecom Technology Com.,Ltd | | |
| Title | 32.TEST_POINT/SHIELD | |
| Size D | Project <Doc> | Rev V1 |
| Date: Tuesday, January 12, 2021 | Sheet 32 of 50 | |

# RF_NFC_not support

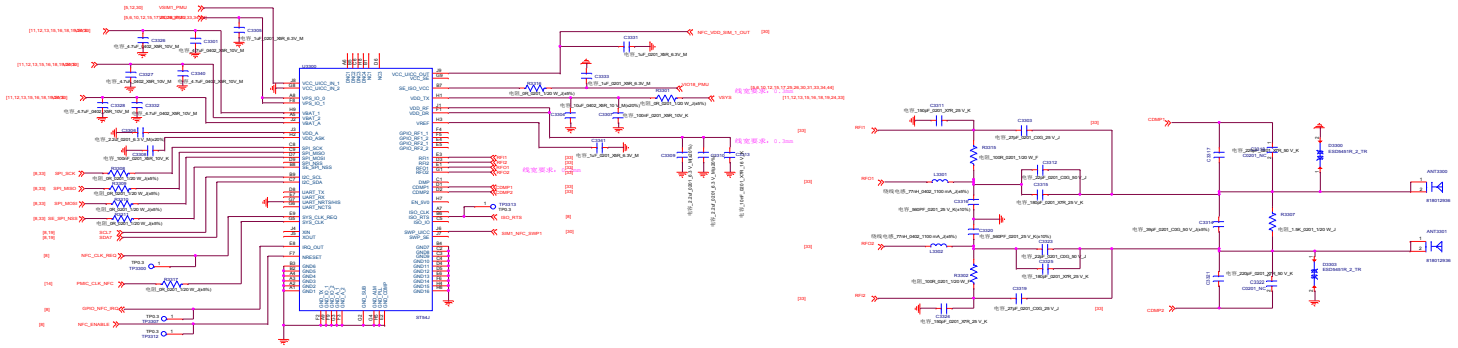

| 华勤通讯 Huaqin Telecom Technology Com.,Ltd | | |
|---|---|---|
| Title: RF_NFC | | |
| Size: E | Project: <Doc> | Rev: V1 |
| Date: Tuesday, January 12, 2021 | Sheet 33 of 48 | |

# SAR_sensor  Not support

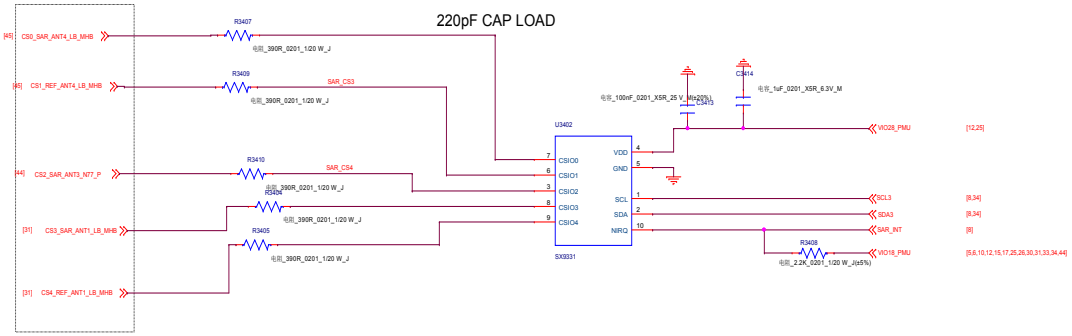


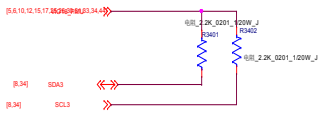


Design notice:
1) CS0_1 nets are differential pairs;
2) The width for each line,should be less than 0.1mm;
3) 0.2mm should be guaranteed between the ground and differential pairs;
4) And also, the distance between the differential line should be more than 0.2mm;
5) All the CSx nets should be protected by surrounding GND;

| | | |
|---|---|---|
| 华勤通讯 Huaqin Telecom Technology Com.,Ltd | | |
| Title: SAR_sensor | | |
| Size: D | Project: <Doc> | Rev: V1 |
| Date: Tuesday, January 12, 2021 | Sheet 34 of 48 | |

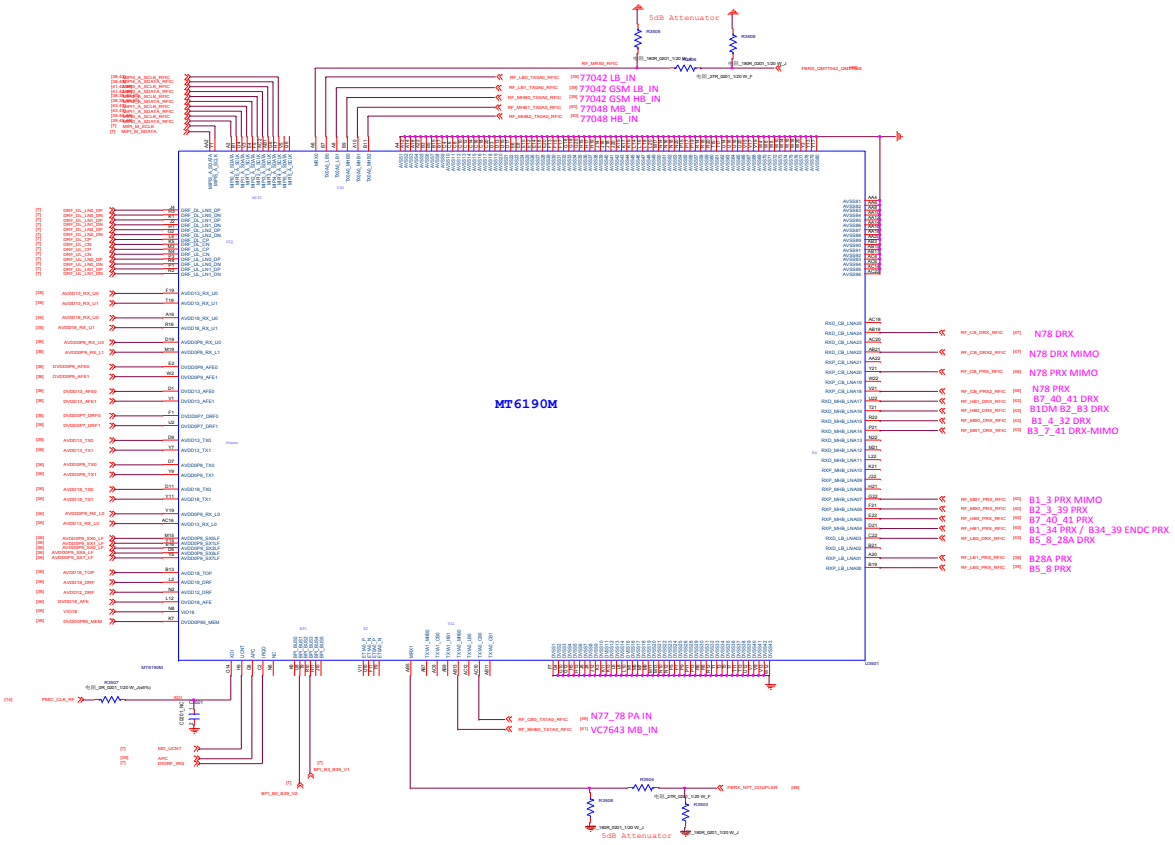


| | | |
|---|---|---|
| 华勤通讯 Huaqin Telecom Technology Com.,Ltd | | |
| Title | MT6190M_Port | |
| Size E | Project <Doc> | Rev V1 |
| Date: Tuesday, January 12, 2021 | Sheet 35 of 48 | |

# MT6190M_PWR

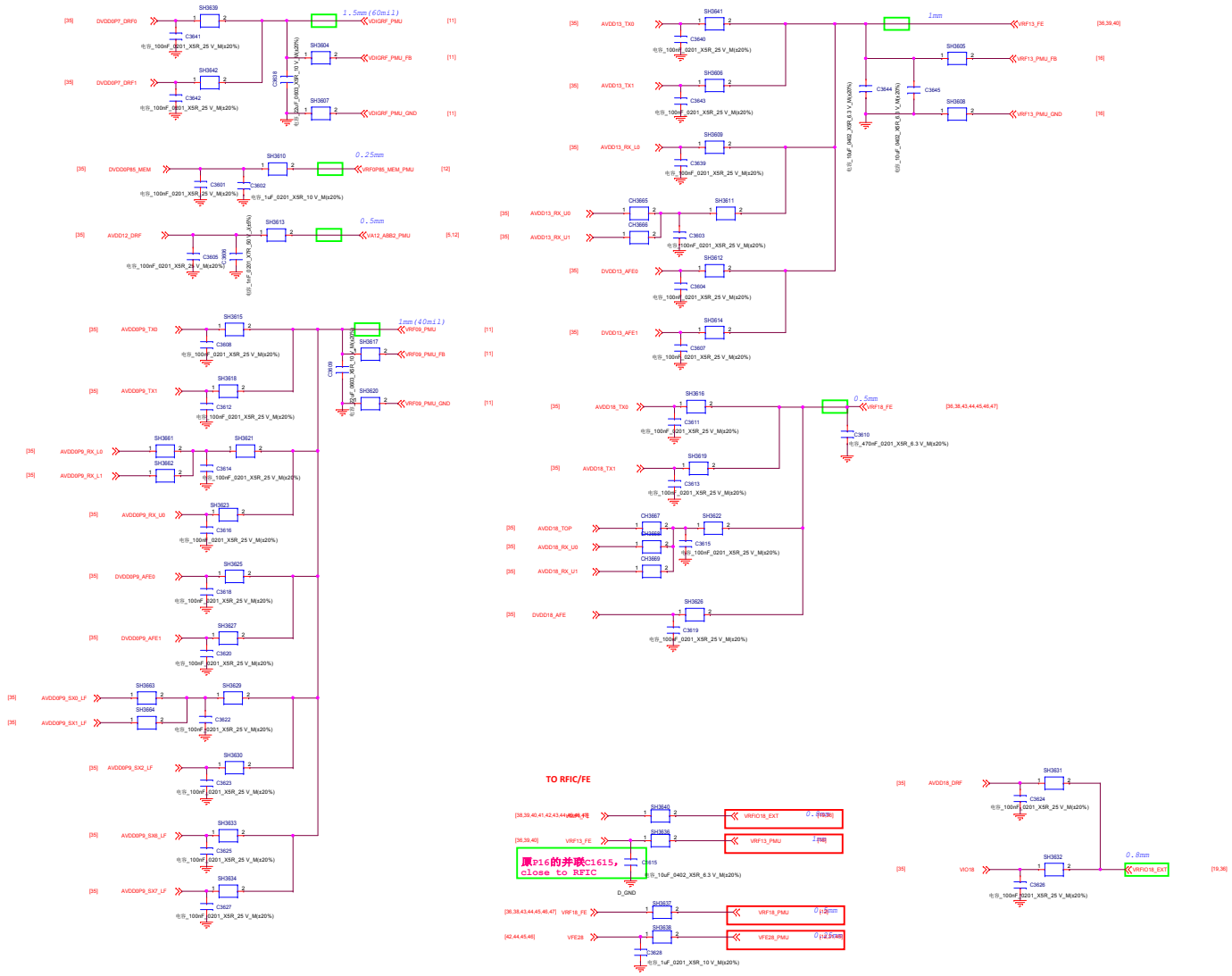


| | | |
|---|---|---|
| 华勤通讯 Huaqin Telecom Technology Com.,Ltd | | |
| Title MT6190M_PWR | | |
| Size D | Project <Doc> | Rev V1 |
| Date: Tuesday, January 12, 2021 | Sheet 36 of 48 | |

| | | |
|---|---|---|
| 华勤通讯 Huaqin Telecom Technology Com.,Ltd | | |
| Title NC_FBRX | | |
| Size D | Project <Doc> | Rev V1 |
| Date: Tuesday, January 12, 2021 | Sheet 37 of 48 | |

# RF_APT

## QM77042 and QM77048 for one APT

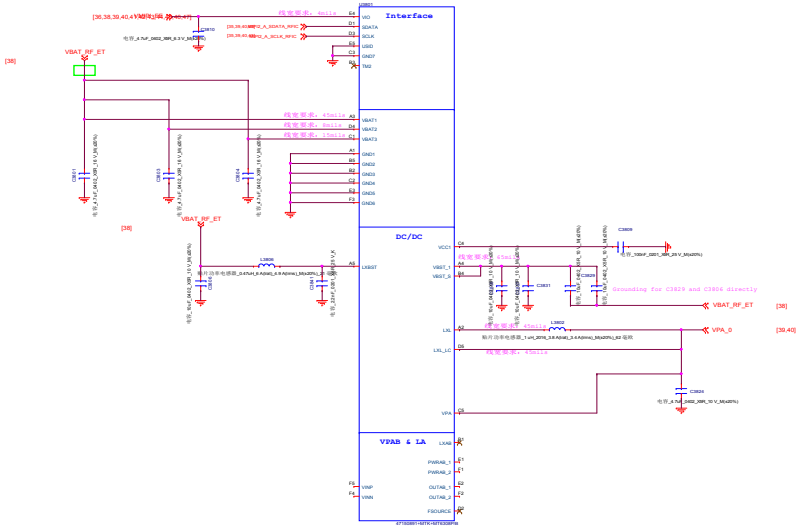


## VC7643 and QM78200 for the other APT

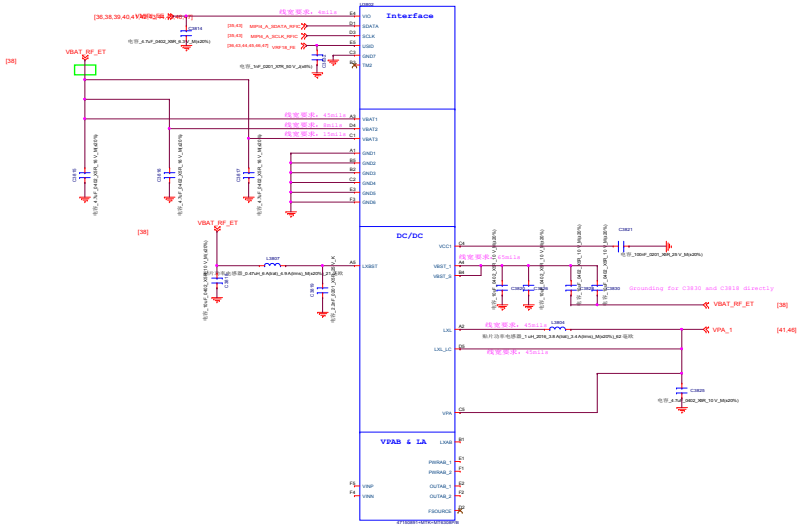

| | | |
|---|---|---|
| 华勤通讯 Huaqin Telecom Technology Com.,Ltd | | |
| Title RF_APT_MT6308M | | |
| Size E | Project <Doc> | Rev V1 |
| Date: Tuesday, January 12, 2021 | Sheet 38 of 48 | |

# 2G_3G/4G/5G LB PA_QM77042

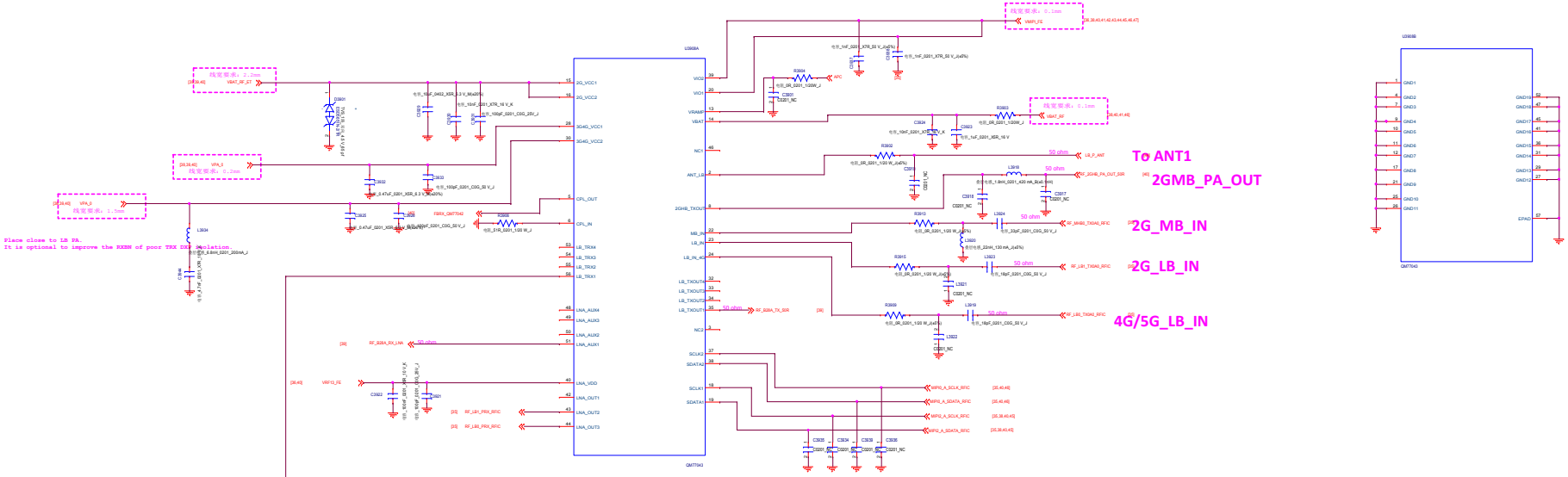


## QM77042同QM77043 pin to pin

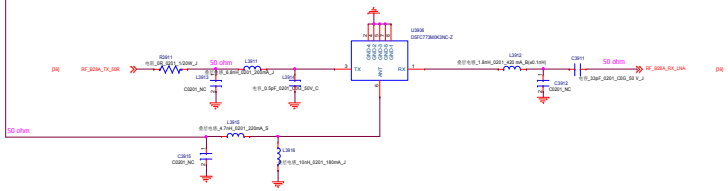

## NTC温度检测
## 见P10的R1001 and NTC1001

| | | |
|---|---|---|
| 华勤通讯 Huaqin Telecom Technology Com.,Ltd | | |
| Title QM77042 | | |
| Size A0 | Project <Doc> | Rev v1 |
| Date: Tuesday, January 12, 2021 | Sheet 39 of 48 | |

# 4G/5G MHB PA_QM77048E

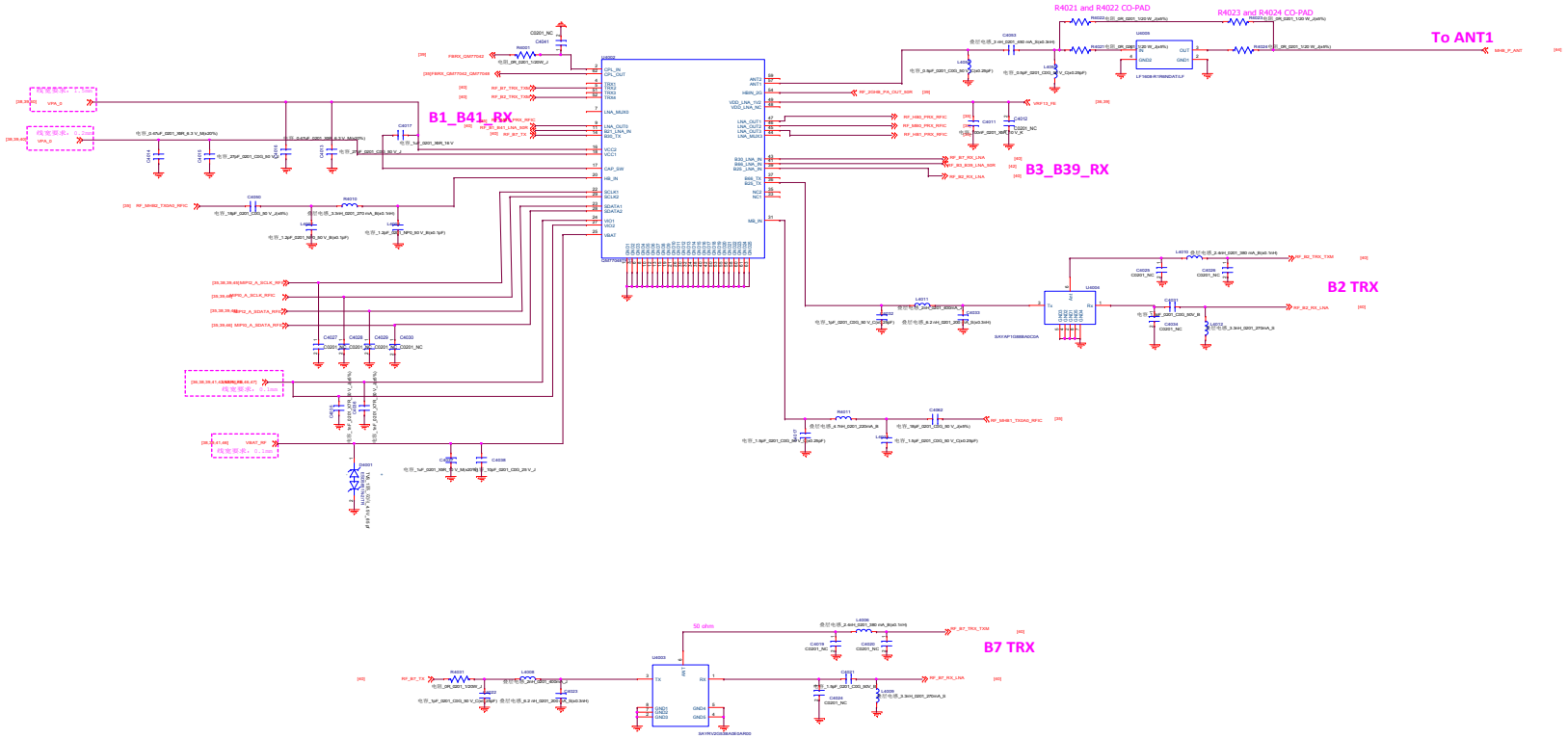


NTC温度检测
见P10的R1002 and NTC1002

| | | |
|---|---|---|
| 华勤通讯 Huaqin Telecom Technology Com.,Ltd | | |
| Title QM77048E | | |
| Size E | Project <Doc> | Rev V1 |
| Date: Tuesday, January 12, 2021 | Sheet 40 of 48 | |

# MMMB PA_MB ENDC

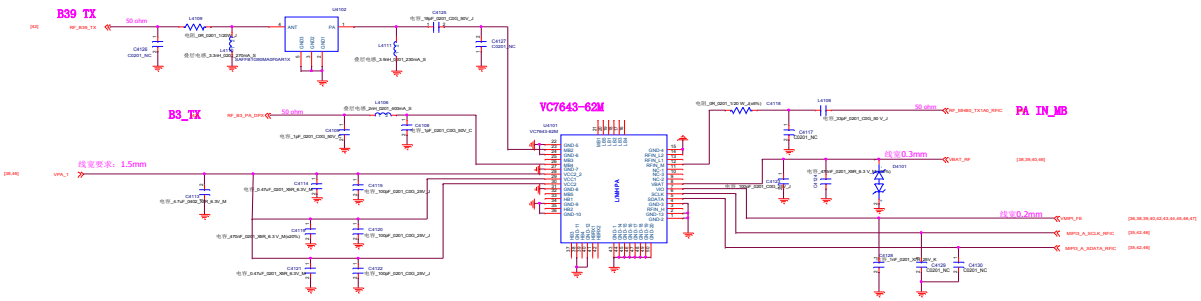


| | | | |
|---|---|---|---|
| 华勤通讯 Huaqin Telecom Technology Com.,Ltd | | | |
| Title | MMMB PA_MB ENDC | | |
| Size E | Project <Doc> | | Rev V1 |
| Date: Tuesday, January 12, 2021 | | Sheet 41 of 48 | |

# MMMB PA_VC7643_ENDC_MHB_TRX

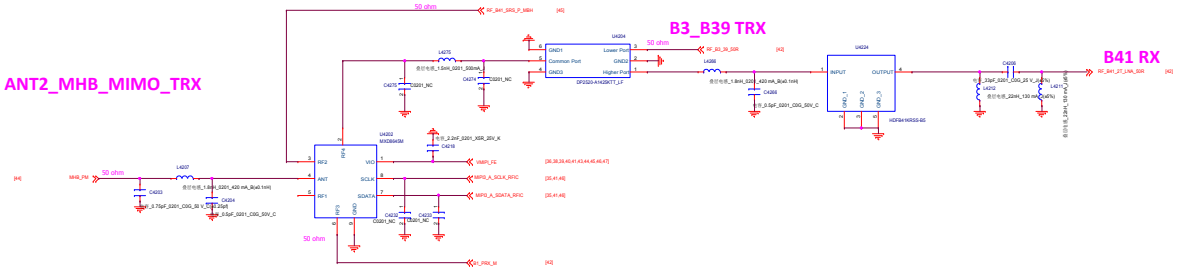


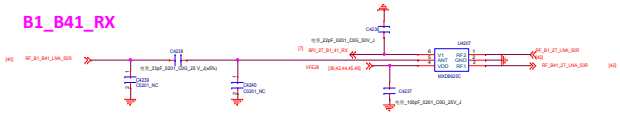

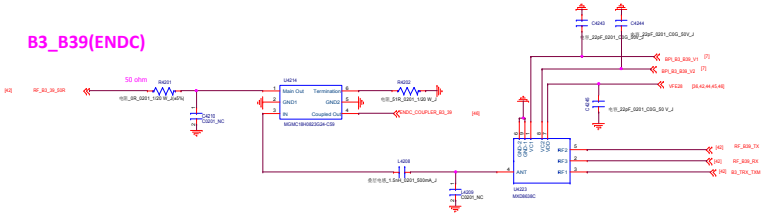


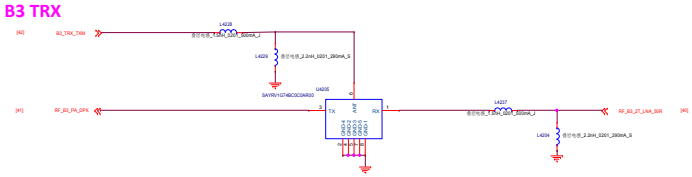


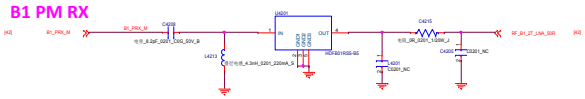


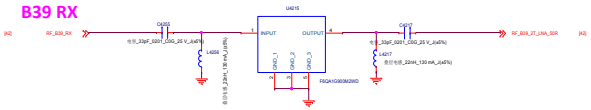


| | | |
|---|---|---|
| 华勤通讯 Huaqin Telecom Technology Com.,Ltd | | |
| Title MMMB PA_VC7643_ENDC_MHB_TRX | | |
| Size A0 | Project <Doc> | Rev V1 |
| Date: Tuesday, January 12, 2021 | Sheet 42 of 48 | |

# DRX_MXD98E2DA+MXD83K5A

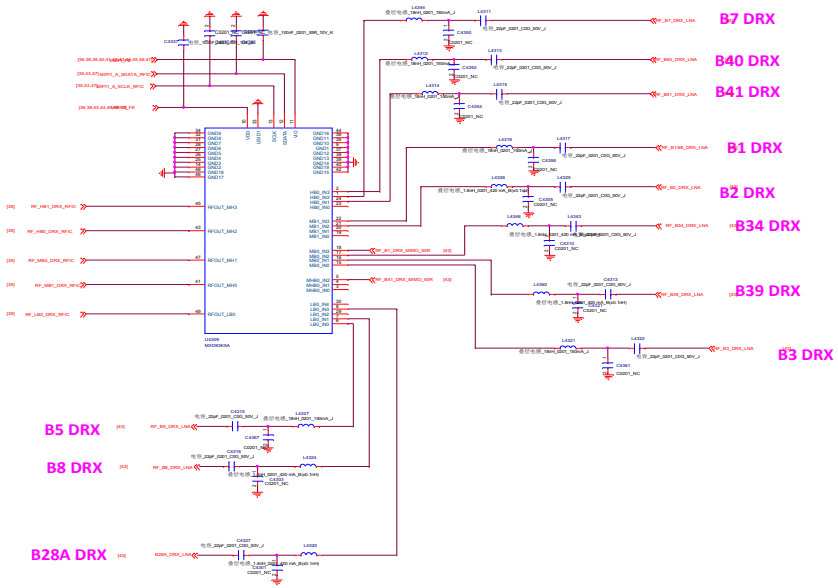


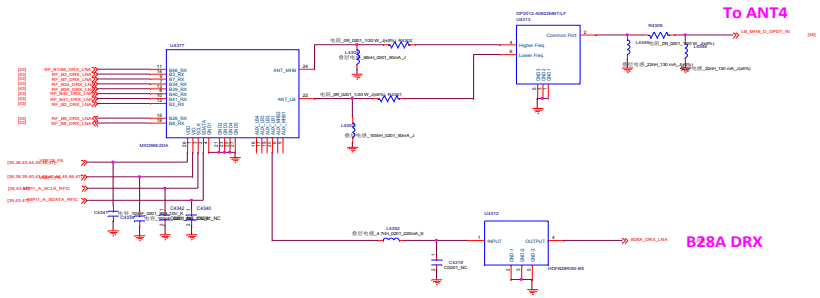


# DRX_MIMO

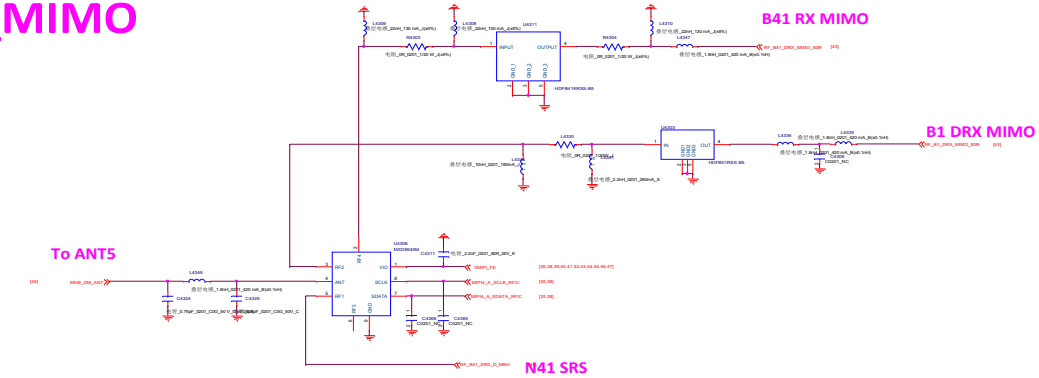


| | | |
|---|---|---|
| 华勤通讯 Huaqin Telecom Technology Com.,Ltd | | |
| Title MXD98E2DA_MXD83K5A | | |
| Size E | Project <Doc> | Rev V1 |
| Date: Tuesday, January 12, 2021 | Sheet 43 of 48 | |

# ANT1 （LB_MHB_P） to 小板

# ANT2 （MHB_PM/N77_TRX）

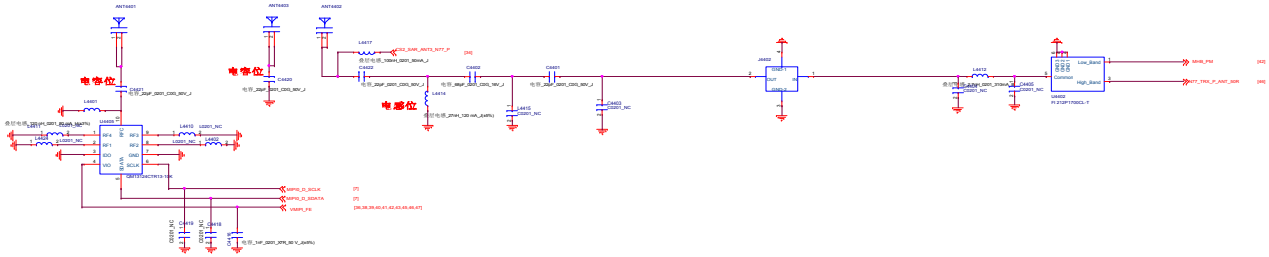


# ANT3 （N77_PM）

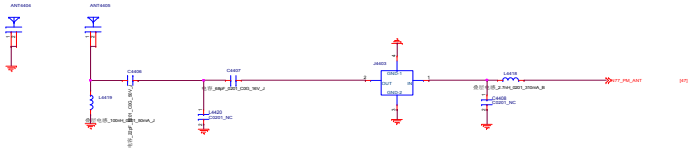

| | | |
|---|---|---|
| 华勤通讯 Huaqin Telecom Technology Com.,Ltd | | |
| Title ANT_P_PM | | |
| Size E | Project <Doc> | Rev V1 |
| Date: Tuesday, January 12, 2021 | Sheet 44 of 48 | |

# ANT4 （LB_MHB_D）

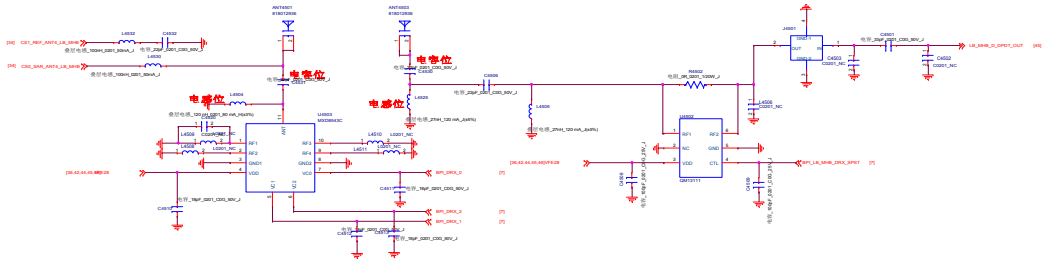


# AsDIV_2P4T

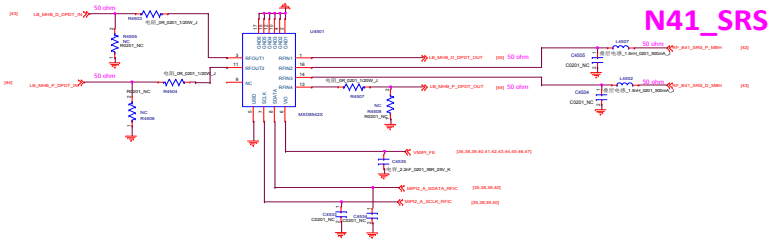


# ANT5 （MHB_DM/N77_D）

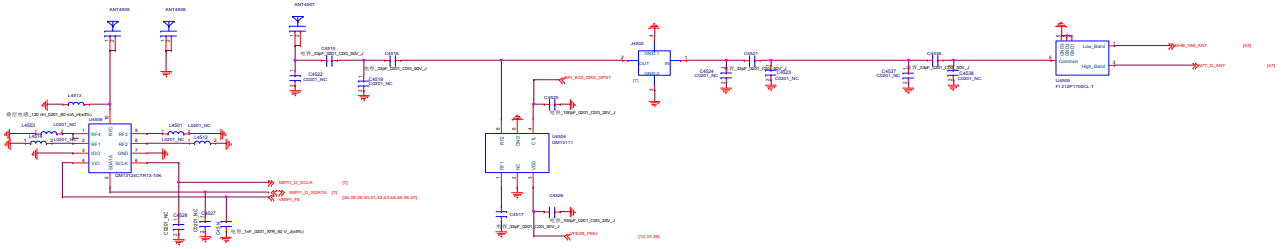

# ANT6 （N77_DM） to 小板

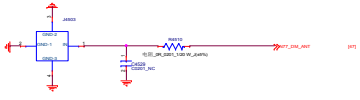

接地弹片

| | | |
|---|---|---|
| 华勤通讯 Huaqin Telecom Technology Com.,Ltd | | |
| Title ANT_D_DM | | |
| Size E | Project <Doc> | Rev V1 |
| Date: Tuesday, January 12, 2021 | Sheet 45 of 48 | |

# N77/78_TRX0_QM78207

NTC温度检测
见P10的R1002 and NTC1002

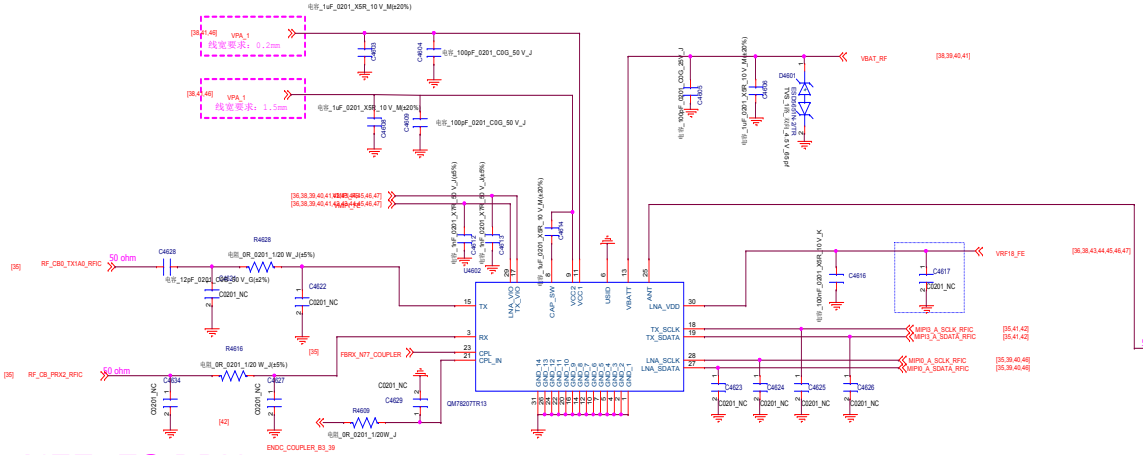


N77_78 PRX

## N77/78_SRS

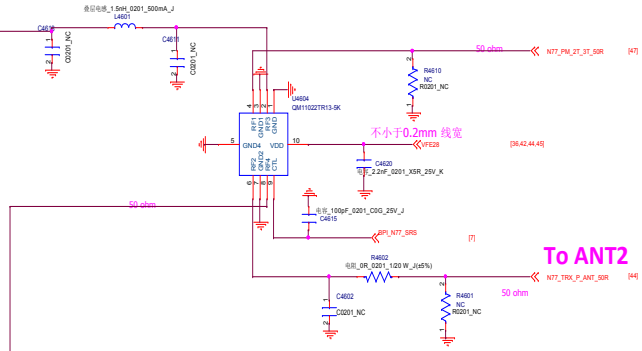


# N77/78_MIMO_MXD9121UA

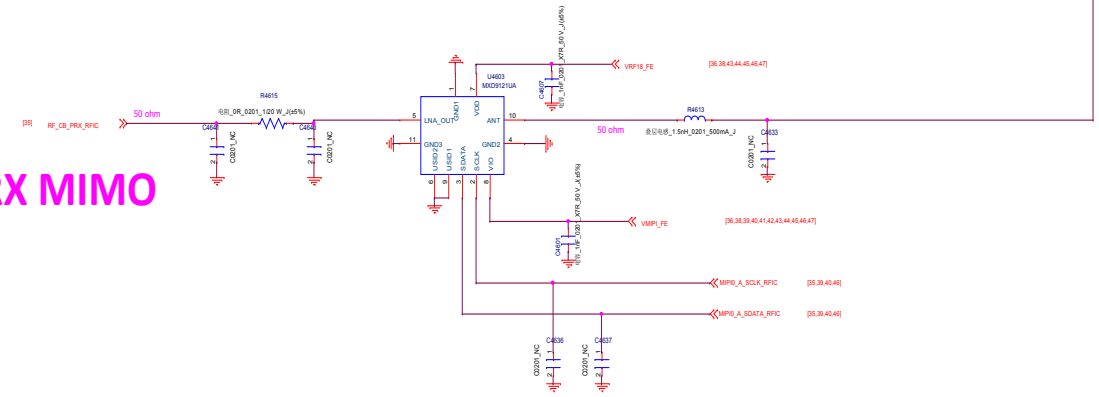


N77_78 PRX MIMO

| | | |
|---|---|---|
| 华勤通讯 Huaqin Telecom Technology Com.,Ltd | | |
| Title N77/78_TRX0_QM78207 | | |
| Size D | Project <Doc> | Rev V1 |
| Date: Tuesday, January 12, 2021 | Sheet 46 of 48 | |

# N77/78_DRX_MXD9121UA

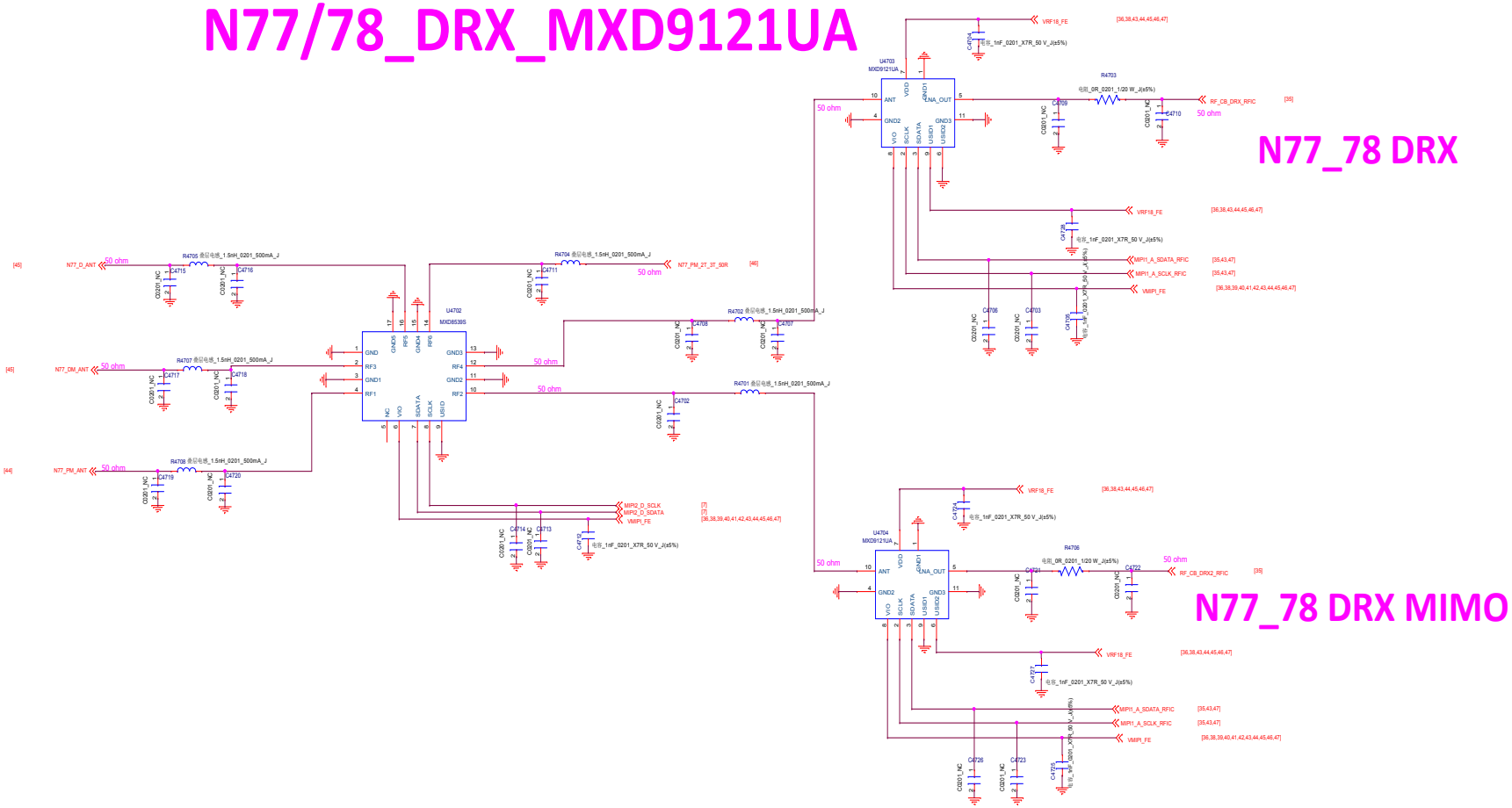


| 华勤通讯 Huaqin Telecom Technology Com.,Ltd | | |
|---|---|---|
| Title N77/78_DRX_MXD9121UA | | |
| Size D | Project <Doc> | Rev V1 |
| Date: Tuesday, January 12, 2021 | Sheet 47 of 48 | |

# ANT7
# WiFi 2.4G & 5G_GPS

# MT6631

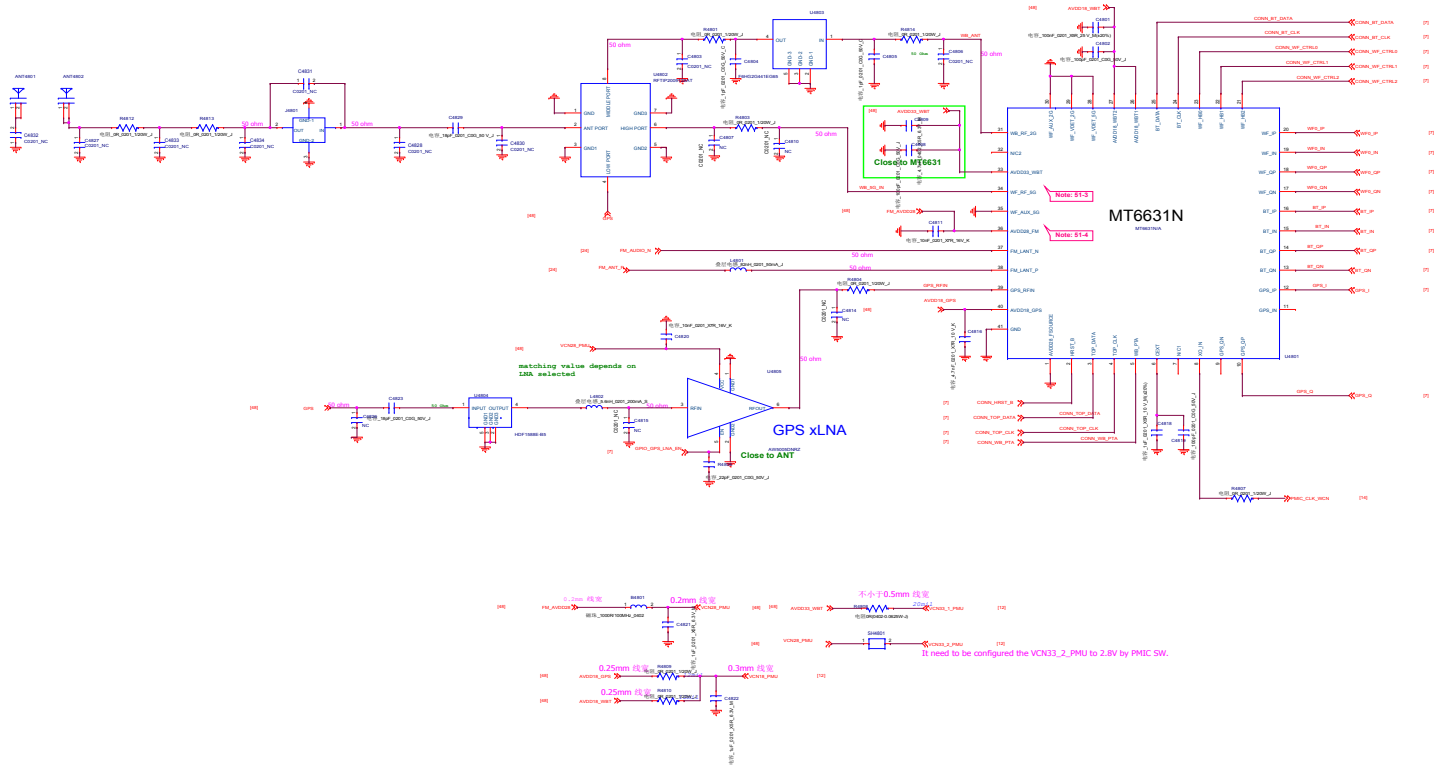





**Schematic design notice of "51_CONNECTIVITY_CONSYS_MT6631"**

| | |
|---|---|
| Note 51-1: | For R5015 size, please select 0402 size or larger one |
| Note 51-2: | Please refer to MT6765 Baseband design notice for VCN33 LDO selection guide |
| Note 51-3: | If WiFi 5G not support, connect pin 34(WF_RF_5G) to GND |
| Note 51-4: | Pin 36 (AVDD28_FM) must be connected to VCN28 even if FM not support |

| | | |
|---|---|---|
| 华勤通讯 Huaqin Telecom Technology Com.,Ltd | | |
| Title: MT6631 | | |
| Size: E | Project: <Doc> | Rev: V1 |
| Date: Tuesday, January 12, 2021 | Sheet 48 of 48 | |